HR-S5900U/5910U
HR-S3900U/3910U

JVC

VICTOR COMPANY OF JAPAN, LIMITED

COPYRIGHT © 2001 VICTOR COMPANY OF JAPAN, LTD.

U/U(C)
Printed in Malaysia
0101 IYV*ID*PJ

JVC

HR-S3900U/S5900U

JVC SERVICE & ENGINEERING COMPANY OF AMERICA

DIVISION OF JVC AMERICAS CORP.

Head office	:	1700 Valley Road Wayne, New Jersey 07470-9976	(973)315-5000
East Coast	:	10 New Maple Avenue Pine Brook, New Jersey 07058-9641	(973)396-1000
Midwest	:	705 Enterprise Street Aurora, Illinois 60504-8149	(630)851-7855
West Coast	:	5665 Corporate Avenue Cypress, California 90630-0024	(714)229-8011
Atlanta	:	1500 Lakes Parkway Lawrenceville, Georgia 30043-5857	(770)339-2582
Hawaii	:	2969 Mapunapuna Place Honolulu, Hawaii 96819-2040	(808)833-5828

JVC CANADA INC.

Head office	:	21 Finchdene Square Scarborough, Ontario M1X 1A7	(416)293-1311
Montreal	:	16800 Rte Trans-Canadienne, Kirkland, Quebec H9H 5G7	(514)871-1311
Vancouver	:	13040 Worster Court Richmond, B.C. V6V 2B3	(604)270-1311

JVC

No. 82848

S40895-03

JVC

SERVICE MANUAL

VIDEO CASSETTE RECORDER

HR-S3900U/U(C), HR-S5900U/U(C)

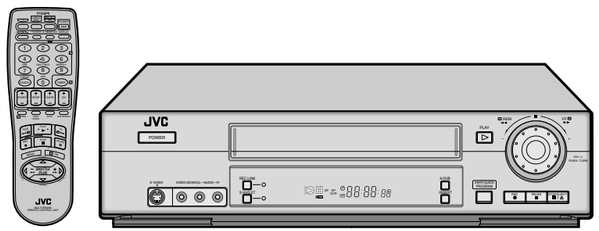

S-VHS Hi-Fi VCRplus+ GCABLE BOX CONTROL Super VHS ET

SPECIFICATIONS *(The specifications shown pertain specifically to the model HR-S3900U/S3910U/S5900U/S5910U)*

GENERAL

Power requirement	: AC 120 V∿ , 60 Hz
Power consumption	
Power on	: 20 W
Power off	: 2.5 W
Temperature	
Operating	: 5°C to 40°C (41°F to 104°F)
Storage	: –20°C to 60°C (–4°F to140°F)
Operating position	: Horizontal only
Dimensions (W x H x D)	: 400 x 94 x 283 mm
Weight	: 3.3 kg
Format	: S-VHS/VHS NTSC standard
Maximum recording time	
SP	: 210 min. with ST-210 video cassette
EP	: 630 min. with ST-210 video cassette

VIDEO/AUDIO

Signal system	: NTSC-type color signal and EIA monochrome signal, 525 lines/60 fields
Recording/ Playback system	: DA-4 (Double Azimuth) head helical scan system
Signal-to-noise ratio	: 45 dB
Horizontal resolution	
VHS	: 230 lines
S-VHS	: 400 lines
Frequency range	
Normal audio	: 70 Hz to 10,000 Hz
Hi-Fi audio	: 20 Hz to 20,000 Hz
Input/Output	: RCA connectors (IN x 2, OUT x 1) S-video connectors For HR-S5900U/5910U: (IN x 2, OUT x 1) For HR-S3900U/3910U: (IN x 1, OUT x 1)

TUNER

Tuning system	: Frequency-synthesized tuner
Channel coverage	
VHF	: Channels 2–13
UHF	: Channels 14–69
CATV	: 113 Channels
RF output	: Channel 3 or 4 (switchable; preset to Channel 3 when shipped) 75 ohms, unbalanced

TIMER

Clock reference	: Quartz
Program capacity	: 1-year programmable timer/ 8 programs

Memory backup for timer is not supported.

ACCESSORIES

Provided accessories	: Infrared remote control unit, "AA" battery x 2, S-video cable (4-pin), RF cable (F-type)

Specifications shown are for SP mode unless specified otherwise.
E. & O.E. Design and specifications subject to change without notice.

Printed in Japan

This service manual is printed on 100% recycled paper.
COPYRIGHT © 2001 VICTOR COMPANY OF JAPAN, LTD.

No. 82848
March 2001

TABLE OF CONTENTS

Section	Title	Page
Important Safety Precautions		
INSTRUCTIONS		
1.	**DISASSEMBLY**	
1.1	Disassembly flow chart	1-1
1.2	How to read the disassembly and assembly	1-1
1.3	Disassembly/assembly method	1-1
1.4	Service position	1-4
1.4.1	How to set the "Service position"	1-4
1.5	Mechanism service mode	1-4
1.5.1	How to set the "Mechanism service mode"	1-4
1.6	Jig RCU mode	1-4
1.6.1	Setting the Jig RCU mode	1-4
1.6.2	Setting the User RCU mode	1-4
1.7	Emergency display function	1-5
1.7.1	Displaying the EMG information	1-5
1.7.2	Clearing the EMG history	1-5
1.7.3	EMG content description	1-6
1.7.4	EMG detail information <1>	1-7
1.7.5	EMG detail information <2>	1-8
2.	**MECHANISM ADJUSTMENT**	
2.1	Before starting repair and adjustment	2-1
2.1.1	Precautions	2-1
2.1.2	Checking for proper mechanical operations	2-1
2.1.3	Manually removing the cassette tape	2-1
2.1.4	Jigs and tools required for adjustment	2-2
2.1.5	Maintenance and inspection	2-3
2.2	Replacement of major parts	2-6
2.2.1	Before starting disassembling (Phase matching between mechanical parts)	2-6
2.2.2	How to set the "Mechanism assembling mode"	2-6
2.2.3	Cassette holder assembly	2-6
2.2.4	Pinch roller arm assembly	2-8
2.2.5	Guide arm assembly and press lever assembly	2-8
2.2.6	A/C head	2-8
2.2.7	Loading motor	2-8
2.2.8	Capstan motor	2-9
2.2.9	Pole base assembly (supply or take-up side)	2-9
2.2.10	Rotary encoder	2-10
2.2.11	Clutch unit	2-10
2.2.12	Change lever assembly, direct gear, clutch gear and coupling gear	2-10
2.2.13	Link lever	2-11
2.2.14	Cassette gear, control cam and worm gear	2-11
2.2.15	Control plate	2-11
2.2.16	Loading arm gear (supply or take-up side) and loading arm gear shaft	2-12
2.2.17	Take-up lever, take-up head and control plate guide	2-13
2.2.18	Capstan brake assembly	2-13
2.2.19	Sub brake assembly (take-up side)	2-13
2.2.20	Main brake assembly (take-up side), reel disk (take-up side) and main brake assembly (supply side)	2-13
2.2.21	Tension brake assembly, reel disk (supply side) and tension arm assembly	2-14
2.2.22	Idler lever, idler arm assembly	2-14
2.2.23	Stator assembly	2-14
2.2.24	Rotor assembly	2-14
2.2.25	Upper drum assembly	2-15
2.3	Compatibility adjustment	2-16
2.3.1	FM waveform linearity	2-16
2.3.2	Height and tilt of the A/C head	2-17
2.3.3	A/C head phase (X-value)	2-17
2.3.4	Standard tracking preset	2-18
2.3.5	Tension pole position	2-18
3.	**ELECTRICAL ADJUSTMENT**	
3.1	Precaution	3-1
3.1.1	Required test equipments	3-1
3.1.2	Required adjustment tools	3-1
3.1.3	Color (colour) bar signal,Color (colour) bar pattern	3-1
3.1.4	Switch settings and standard precautions	3-1
3.1.5	EVR Adjustment	3-1
3.2	Servo circuit	3-2
3.2.1	Switching point	3-2
3.2.2	Slow tracking preset	3-2
3.3	Video circuit	3-2
3.3.1	D/A level	3-2
3.3.2	EE Y/PB Y (S-VHS/VHS) level	3-2
3.3.3	REC color (colour) level	3-3
3.3.4	Video EQ (Frequency response)	3-3
3.3.5	Auto picture initial setting	3-4
3.4	Audio circuit	3-4
3.4.1	Audio REC FM	3-4
3.5	Demodulator circuit	3-4
3.5.1	Input level	3-4
3.5.2	Stereo VCO	3-5
3.5.3	Stereo filter	3-5
3.5.4	Separation - 1	3-5
3.5.5	Separation - 2	3-5
3.5.6	SAP VCO	3-6
4.	**CHARTS AND DIAGRAMS**	
	NOTES OF SCHEMATIC DIAGRAM	4-1
	CIRCUIT BOARD NOTES	4-2
4.1	BOARD INTERCONNECTIONS	4-3
4.2	MAIN (VIDEO/AUDIO) SCHEMATIC DIAGRAM	4-5
4.3	MAIN (S-SUB) SCHEMATIC DIAGRAM	4-7
4.4	MAIN (SYSCON) SCHEMATIC DIAGAM	4-9
4.5	MAIN (SW.REG) SCHEMATIC DIAGRAM	4-11
4.6	MAIN (TUNER/DEMOD) SCHEMATIC DIAGRAM	4-13
4.7	MAIN (FRONT) AND ADV. JOG SCHEMATIC DIAGRAMS	4-15
4.8	MAIN (TERMINAL) SCHEMATIC DIAGRAM	4-17
4.9	MAIN (BS CONNECTION), S-JACK, R.PAUSE AND C.BOX CTL SCHEMATIC DIAGRAMS	4-19
4.10	2D DIGITAL SCHEMATIC DIAGRAM	4-21
4.11	DEMODULATOR SCHEMATIC DIAGRAM	4-23
4.12	MAIN, R.PAUSE AND C.BOX CTL CIRCUIT BOARDS	4-25
4.13	2D DIGITAL AND DEMODULATOR CIRCUIT BOARDS	4-28
4.14	REMOTE CONTROLLER SCHEMATIC DIAGRAM	4-29
4.15	FDP GRID ASSIGNMENT AND ANODE CONNECTION	4-30
4.16	WAVEFORMS	4-31
4.17	VOLTAGE CHARTS	4-33
4.18	CPU PIN FUNCTION	4-34
4.19	SYSTEM CONTROL BLOCK DIAGRAM	4-35
4.20	VIDEO BLOCK DIAGRAM	4-37
4.21	AUDIO BLOCK DIAGRAM	4-41
5.	**PARTS LIST**	
5.1	PACKING AND ACCESSORY ASSEMBLY <M1>	5-1
5.2	FINAL ASSEMBLY <M2>	5-2
5.3	MECHANISM ASSEMBLY <M4>	5-4
5.4	ELECTRICAL PARTS LIST	5-6
	MAIN BOARD ASSEMBLY <03>	5-6
	2D DIGITAL BOARD ASSEMBLY <05>	5-12
	A/C HEAD BOARD ASSEMBLY <12>	5-13
	DEMOD BOARD ASSEMBLY <14>	5-13
	S JACK BOARD ASSEMBLY(S5900U/U(C))<36>	5-13
	ADV.JOG BOARD ASSEMBLY <38>	5-13
	LOADING MOTOR BOARD ASSEMBLY <55>	5-14
	R.PAUSE BOARD ASSEMBLY <91>	5-14
	C.BOX BOARD ASSEMBLY <92>	5-14

The following table lists the differing points between Models (HR-S3900U/U(C), HR-S5900U and HR-S5900U(C)) in this series.

	HR-S3900U/U(C)	HR-S5900U	HR-S5900U(C)
FLYING ERASE HEAD	NOT USED	USED	USED
INSERT/OPERATION	NOT USED	USED	USED
AUDIO DUBBING/OPERATION	NOT USED	USED	USED
REC RESUME	NOT USED	NOT USED	USED
FRONT SOVIDEO INPUT TERMINAL	NOT USED	USED	USED

Important Safety Precautions

Prior to shipment from the factory, JVC products are strictly inspected to conform with the recognized product safety and electrical codes of the countries in which they are to be sold. However, in order to maintain such compliance, it is equally important to implement the following precautions when a set is being serviced.

● Precautions during Servicing

1. Locations requiring special caution are denoted by labels and inscriptions on the cabinet, chassis and certain parts of the product. When performing service, be sure to read and comply with these and other cautionary notices appearing in the operation and service manuals.

2. Parts identified by the ⚠ symbol and shaded ( ) parts are critical for safety.
   Replace only with specified part numbers.
   Note: Parts in this category also include those specified to comply with X-ray emission standards for products using cathode ray tubes and those specified for compliance with various regulations regarding spurious radiation emission.

3. Fuse replacement caution notice.
   Caution for continued protection against fire hazard.
   Replace only with same type and rated fuse(s) as specified.

4. Use specified internal wiring. Note especially:
   1) Wires covered with PVC tubing
   2) Double insulated wires
   3) High voltage leads

5. Use specified insulating materials for hazardous live parts. Note especially:
   1) Insulation Tape 3) Spacers 5) Barrier
   2) PVC tubing 4) Insulation sheets for transistors

6. When replacing AC primary side components (transformers, power cords, noise blocking capacitors, etc.) wrap ends of wires securely about the terminals before soldering.

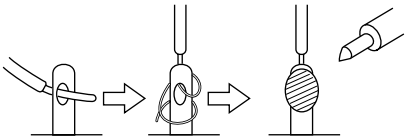

Fig.1

7. Observe that wires do not contact heat producing parts (heatsinks, oxide metal film resistors, fusible resistors, etc.)

8. Check that replaced wires do not contact sharp edged or pointed parts.

9. When a power cord has been replaced, check that 10-15 kg of force in any direction will not loosen it.

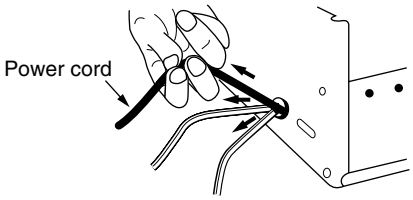

Fig.2

10. Also check areas surrounding repaired locations.

11. Products using cathode ray tubes (CRTs)
    In regard to such products, the cathode ray tubes themselves, the high voltage circuits, and related circuits are specified for compliance with recognized codes pertaining to X-ray emission.
    Consequently, when servicing these products, replace the cathode ray tubes and other parts with only the specified parts. Under no circumstances attempt to modify these circuits.
    Unauthorized modification can increase the high voltage value and cause X-ray emission from the cathode ray tube.

12. Crimp type wire connector
    In such cases as when replacing the power transformer in sets where the connections between the power cord and power transformer primary lead wires are performed using crimp type connectors, if replacing the connectors is unavoidable, in order to prevent safety hazards, perform carefully and precisely according to the following steps.

    1) Connector part number : E03830-001
    2) Required tool : Connector crimping tool of the proper type which will not damage insulated parts.
    3) Replacement procedure
    (1) Remove the old connector by cutting the wires at a point close to the connector.
    Important : Do not reuse a connector (discard it).

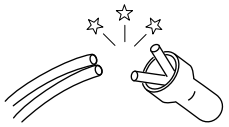

Fig.3

(2) Strip about 15 mm of the insulation from the ends of the wires. If the wires are stranded, twist the strands to avoid frayed conductors.

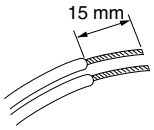

Fig.4

(3) Align the lengths of the wires to be connected. Insert the wires fully into the connector.

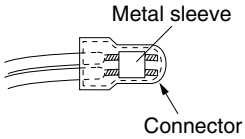

Fig.5

(4) As shown in Fig.6, use the crimping tool to crimp the metal sleeve at the center position. Be sure to crimp fully to the complete closure of the tool.

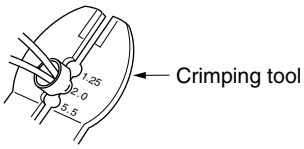

Fig.6

(5) Check the four points noted in Fig.7.

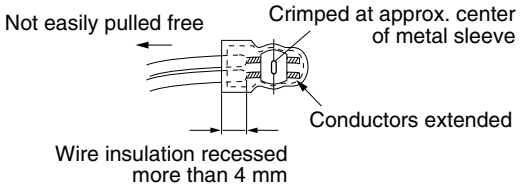

Fig.7

● Safety Check after Servicing

Examine the area surrounding the repaired location for damage or deterioration. Observe that screws, parts and wires have been returned to original positions, Afterwards, perform the following tests and confirm the specified values in order to verify compliance with safety standards.

1. Insulation resistance test

Confirm the specified insulation resistance or greater between power cord plug prongs and externally exposed parts of the set (RF terminals, antenna terminals, video and audio input and output terminals, microphone jacks, earphone jacks, etc.). See table 1 below.

2. Dielectric strength test

Confirm specified dielectric strength or greater between power cord plug prongs and exposed accessible parts of the set (RF terminals, antenna terminals, video and audio input and output terminals, microphone jacks, earphone jacks, etc.). See table 1 below.

3. Clearance distance

When replacing primary circuit components, confirm specified clearance distance (d), (d') between soldered terminals, and between terminals and surrounding metallic parts. See table 1 below.

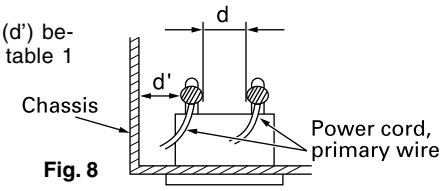

Fig. 8

4. Leakage current test

Confirm specified or lower leakage current between earth ground/power cord plug prongs and externally exposed accessible parts (RF terminals, antenna terminals, video and audio input and output terminals, microphone jacks, earphone jacks, etc.).

Measuring Method : (Power ON)

Insert load Z between earth ground/power cord plug prongs and externally exposed accessible parts. Use an AC voltmeter to measure across both terminals of load Z. See figure 9 and following table 2.

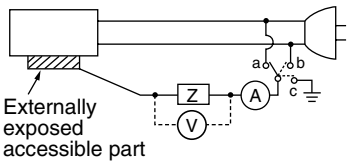

Fig. 9

5. Grounding (Class 1 model only)

Confirm specified or lower grounding impedance between earth pin in AC inlet and externally exposed accessible parts (Video in, Video out, Audio in, Audio out or Fixing screw etc.).

Measuring Method:

Connect milli ohm meter between earth pin in AC inlet and exposed accessible parts. See figure 10 and grounding specifications.

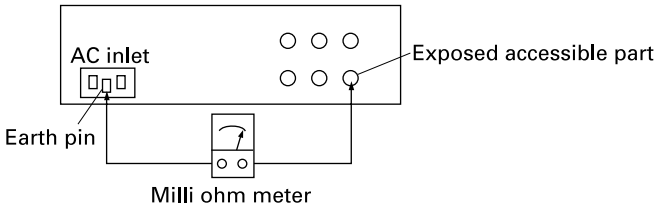

Fig. 10

Grounding Specifications

Region	Grounding Impedance (Z)
USA & Canada	Z ≦ 0.1 ohm
Europe & Australia	Z ≦ 0.5 ohm

AC Line Voltage	Region	Insulation Resistance (R)	Dielectric Strength	Clearance Distance (d), (d')
100 V	Japan	R ≧ 1 MΩ/500 V DC	AC 1 kV 1 minute	d, d' ≧ 3 mm
100 to 240 V			AC 1.5 kV 1 miute	d, d' ≧ 4 mm
110 to 130 V	USA & Canada	1 MΩ ≦ R ≦ 12 MΩ/500 V DC	AC 1 kV 1 minute	d, d' ≧ 3.2 mm
110 to 130 V 200 to 240 V	Europe & Australia	R ≧ 10 MΩ/500 V DC	AC 3 kV 1 minute (Class Ⅱ) AC 1.5 kV 1 minute (Class Ⅰ)	d ≧ 4 mm d' ≧ 8 mm (Power cord) d' ≧ 6 mm (Primary wire)

Table 1 Specifications for each region

AC Line Voltage	Region	Load Z	Leakage Current (i)	a, b, c
100 V	Japan	1 kΩ	i ≦ 1 mA rms	Exposed accessible parts
110 to 130 V	USA & Canada	0.15 μF, 1.5 kΩ	i ≦ 0.5 mA rms	Exposed accessible parts
110 to 130 V 220 to 240 V	Europe & Australia	2 kΩ	i ≦ 0.7 mA peak i ≦ 2 mA dc	Antenna earth terminals
		50 kΩ	i ≦ 0.7 mA peak i ≦ 2 mA dc	Other terminals

Table 2 Leakage current specifications for each region

Note: These tables are unofficial and for reference only. Be sure to confirm the precise values for your particular country and locality.

SECTION 1
DISASSEMBLY

1.1 Disassembly flow chart

This flowchart lists the disassembling steps for the cabinet parts and P.C. boards in order to gain access to item(s) to be serviced. When reassembling, perform the step(s) in reverse order. Bend, route and dress the flat cables as they were originally laid.

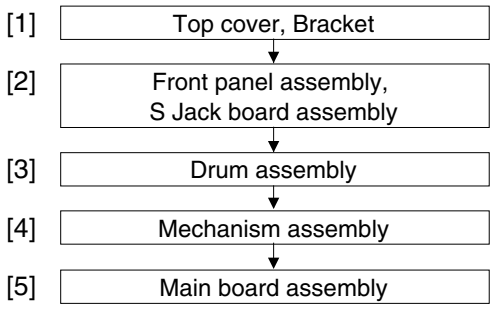

1.2 How to read the disassembly and assembly

<Example>

Step/ Loc No.	Part Name	Fig. No.	Point	Note
[1]	Top cover, Bracket	D1	4(S1a),(S1b),3(L1a), 2(SD1a),(P1a),(W1a), CN1(WR1a), 2(S1c)	<Note 1a>
(1)	(2)	(3)	(4)	(5)

(1) Order of steps in Procedure
When reassembling, perform the step(s) in the reverse order. These numbers are also used as the identification (location) No. of parts Figures.
(2) Part name to be removed or installed.
(3) Fig. No. showing procedure or part location.
(4) Identification of part to be removed, unhooked, unlocked, released, unplugged, unclamped or unsoldered.
P= Spring, W= Washer, S= Screw, L= Locking tab, SD= Solder, CN**(WR**)= Remove the wire (WR**) from the connector (CN**).

Note:
- ***The bracketed ( ) WR of the connector symbol are assigned nos. in priority order and do not correspond to those on the spare parts list.***

(5) Adjustment information for installation

1.3 Disassembly/assembly method

Step/ Loc No.	Part Name	Fig. No.	Point	Note
[1]	Top cover, Bracket	D1	3(S1a) 2(S1b)	
[2]	Front panel assembly S Jack board assembly	D2	CN7001(WR2a) 7(L2a) CN7108(WR2b), 2(S2a)	<Note 2a> <Note 2b> <Note 2c>
[3]	Drum assembly	D3	CON1(WR3a), CN1(WR3b), (S3a), (W3a), Spacer, (S3b), (S3c)	<Note 2c>
[4]	Mechanism assembly	D4	CN2001(WR4a), (S4a), (S4b), (S4c), (S4d)	<Note 2c> <Note 4a>
[5]	Main board assembly	D5	(S5a), 7(L5a)	

<Note 2a>
- When reattaching the Front panel assembly, make sure that the door opener “a” of the Cassette holder assembly is lowered in position prior to the reinstallation.

<Note 2b>
- When reattaching the Front panel assembly, pay careful attention to the switch lever not to make it touch the switch knob “b” of the Main board assembly from the side.

<Note 2c>
- Be careful not to damage the connector and wire etc. during connection and disconnection.
When connecting the wire to the connector, be careful with the wire direction.

<Note 4a>
- When it is required to remove the screws (S4a to S4b) retaining the Mechanism assembly, please refer to the “Procedures for Lowering the Cassette holder assembly”(See on page 1-2).
- When reattaching the Mechanism assembly to the Main board assembly, take care not to damage the sensors and switch on the Main board assembly.

Procedures for Lowering the Cassette holder assembly

As the mechanism of this unit is integrated with the Housing assembly, the holder must be lowered and the two screws unscrewed when removing the Mechanism assembly.

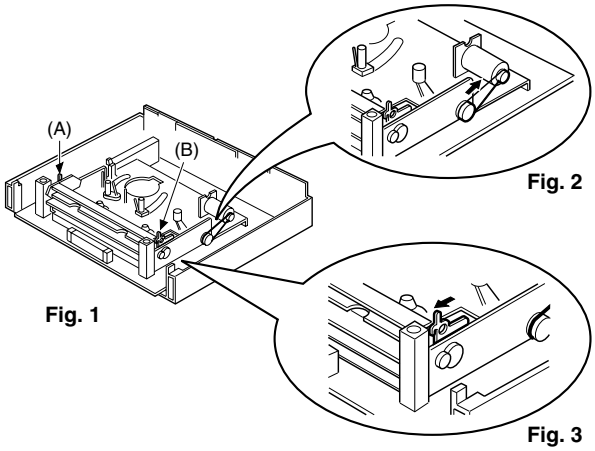

Turn the loading motor pulley in the direction as indicated by Fig.2. As both (A) and (B) levers are lodged twice, push the levers in the direction as indicated by Fig.3 to release them. When pushing the levers, do it in the order of (A), (B), (B), (A). When the holder has been lowered, turn the pulley until the cassette holder is securely in place without allowing any up/down movement.

Procedures for Lowering the Cassette holder assembly

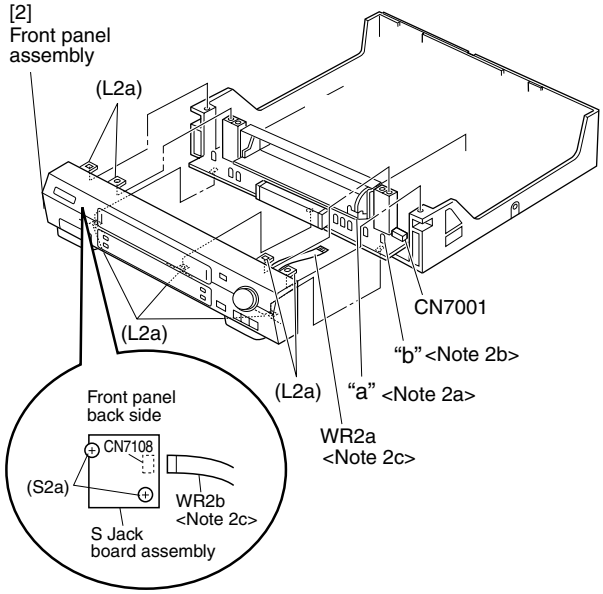

Fig. D2

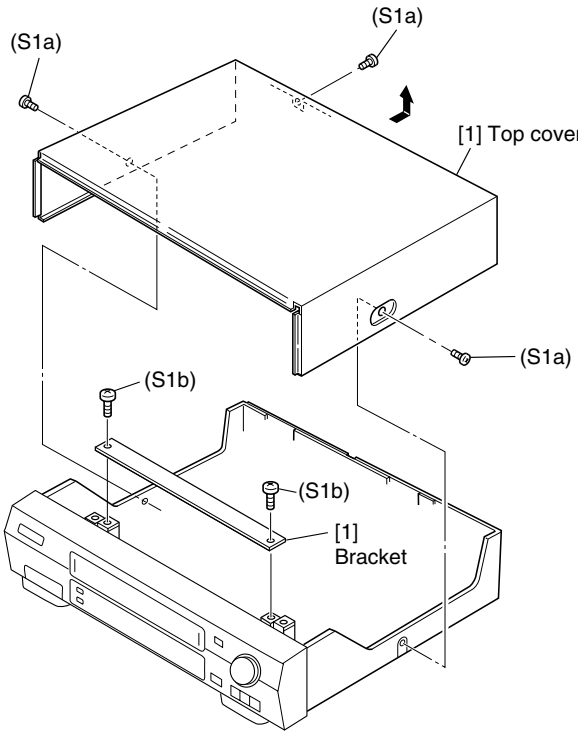

Fig. D1

Note:
When installing the Drum assembly, secure the screws (S3a to S3c) in the order of a, b, c.

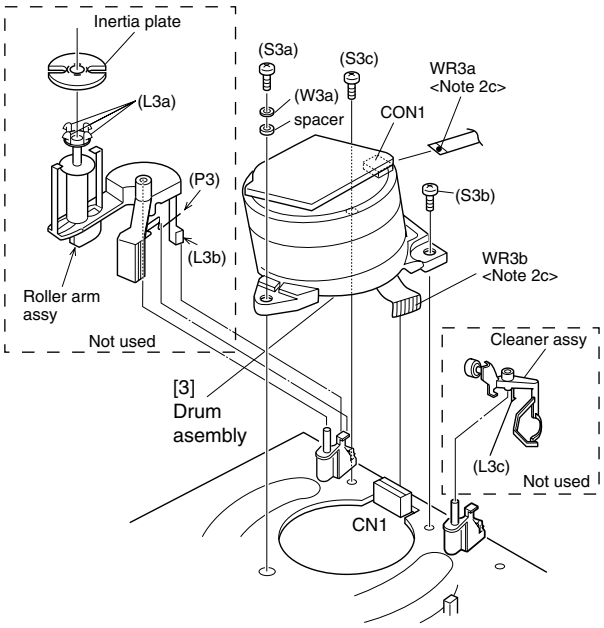

Fig. D3

Note:
When installing the Mechanism assembly, secure the screws (S4a to S4b) in the order of a, b.

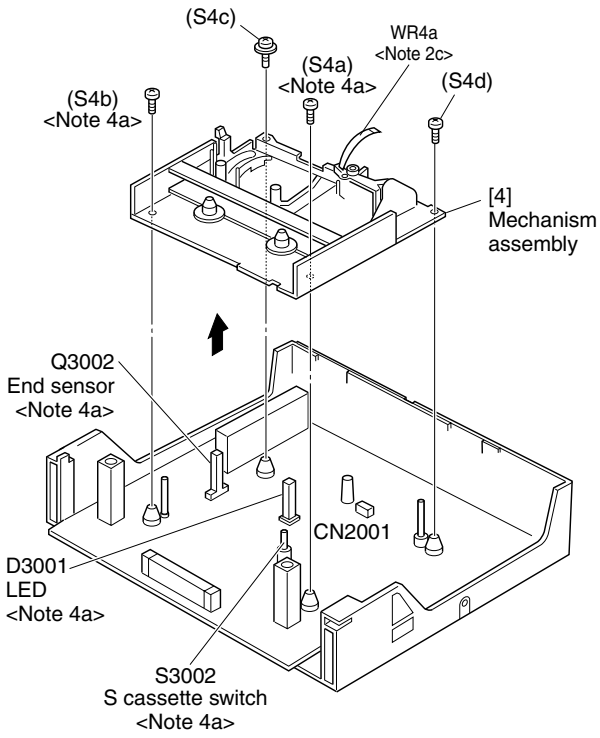

Fig. D4

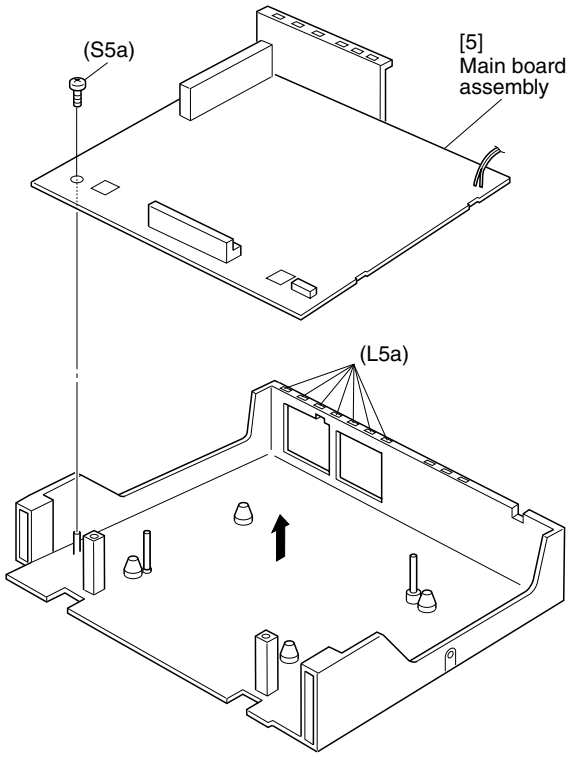

Fig. D5

1.4 Service position

This unit has been designed so that the Mechanism and Main board assemblies can be removed together from the chassis assembly. Before diagnosing or servicing the circuit boards, take out the major parts from the chassis assembly.

1.4.1 How to set the "Service position"

(1) Refer to the disassembly procedure and perform the disassembly of the major parts before removing the Drum assembly.
(2) Lower the cassette holder to prepare for the removal of the Mechanism assembly screws. (Refer to the "Procedures for lowering the Cassette holder assembly" of 1.3 Disassembly/assembly method.)
(3) Remove the combined Mechanism and Main board assemblies.
(4) Connect the wires and connectors of the major parts that have been removed in step (1). (Refer to Fig.1-4-1a.)
(5) Place the combined Mechanism and Main board assemblies upside down.
(6) Insert the power cord plug into the power outlet and then proceed with the diagnostics and servicing of the board assembly.

Notes:

- ***Before inserting the power cord plug into the power outlet, make sure that none of the electrical parts are able to short-circuit between the workbench and the board assembly.***
- ***For the disassembly procedure of the major parts and details of the precautions to be taken, see "1.3 Disassembly/assembly method".***
- ***If there are wire connections from the Main board and Mechanism assemblies to the other major parts, be sure to remove them (including wires connected to the major parts) first before performing step (2).***
- ***When carrying out diagnosis and repair of the Main board assembly in the "Service position", be sure to ground both the Main board and Mechanism assemblies. If they are improperly grounded, there may be noise on the playback picture or FDP counter display may move even when the mechanism is kept in an inoperative status.***
- ***In order to diagnose the playback or recording of the cassette tape, set the Mechanism assembly to the required mode before placing it upside down. If the mechanism mode is changed (including ejection) while it is in an upside down position the tape inside may be damaged.***
- ***The mechanism and board assemblies of this unit are attached by connectors only.***
  When carrying out a diagnosis or repair of the boards in the "Service position", make sure that the connectors are not disconnected.

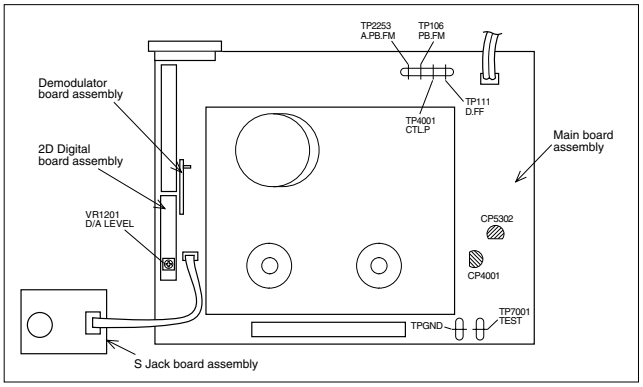

Fig. 1-4-1a

1.5 Mechanism service mode

This model has a unique function to enter the mechanism into every operation mode without loading of any cassette tape. This function is called the "Mechanism service mode".

1.5.1 How to set the "Mechanism service mode"

(1) Unplug the power cord plug from the power outlet.
(2) Connect TPGND and TP7001(TEST) on the Main board assembly with a jump wire.
(3) Insert the power cord plug into the power outlet.
(4) With lock levers (A) (B) on the left and right of the Cassette holder assembly pulled toward the front, slide the holder in the same direction as the cassette insertion direction. (For the positions of lock levers (A) (B), refer to the "Procedures for lowering the Cassette holder assembly" of 1.3 Disassembly/assembly method.)
(5) The cassette holder lowers and, when the loading has completed, the mechanism enters the desired mode.

1.6 Jig RCU mode

This unit uses the following two modes for receiving remote control codes.

1) User RCU mode : Ordinary mode for use by the user.
2) Jig RCU mode : Mode for use in production and servicing.

When using the Jig RCU, it is required to set the VCR to the Jig RCU mode (the mode in which codes from the Jig RCU can be received). As both of the above two modes are stored in the EEPROM, it is required to set the VCR back to the User RCU mode each time that an adjustment is made or to check that the necessary operations have been completed. These modes can be set by the operations described below.

1.6.1 Setting the Jig RCU mode

(1) Unplug the power cord plug from the power outlet.
(2) Press and hold the "REC" and "PAUSE" buttons on the VCR simultaneously, while plugging the power cord plug into the power outlet.
When the VCR is set to the Jig RCU mode, the symbols (" : ") in the time display of the FDP are turned off.

1.6.2 Setting the User RCU mode

(1) Turn off the power.
(2) Press the "REC" and "PAUSE" buttons of the VCR simultaneously. Alternatively, transmit the code "80" from the Jig RCU.

1.7 Emergency display function

This unit has a function for storing the history of the past two emergencies (EMG) and displaying them on each FDP (or OSD). With the status of the VCR and mechanism at the moment an emergency occurred can also be confirmed.

FDP display model
[FDP display]

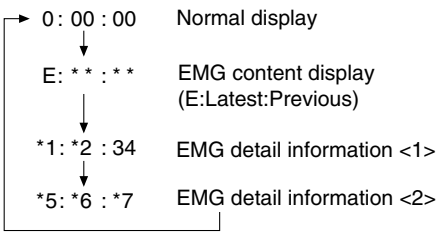

FDP (7segment LED) display model
[FDP display]

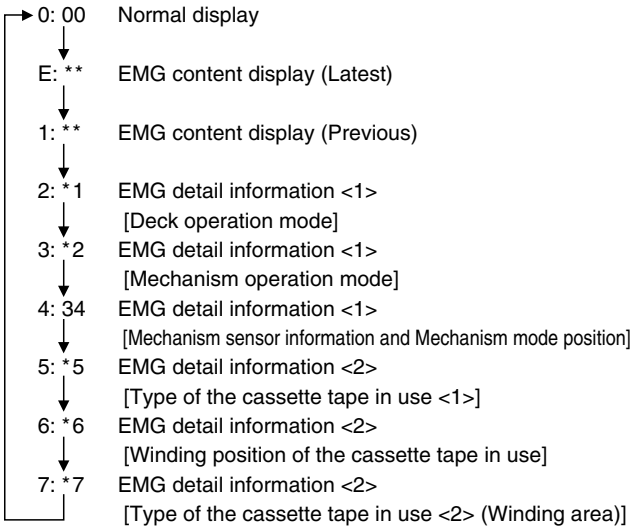

OSD display model
[OSD display]

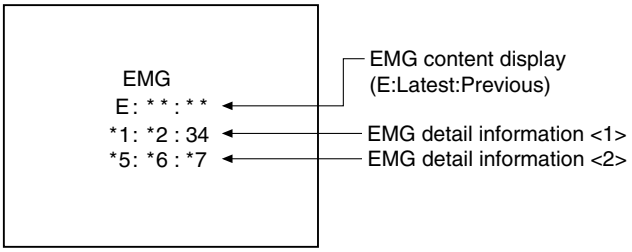

Notes:

- ***The EMG detail information <1><2> show the information on the latest EMG.***
  It becomes " – – : – – : – –" when there is no latest EMG record.
- ***When using the Jig RCU, it is required to set the VCR to the Jig RCU mode (the mode in which codes from the Jig RCU can be received).***

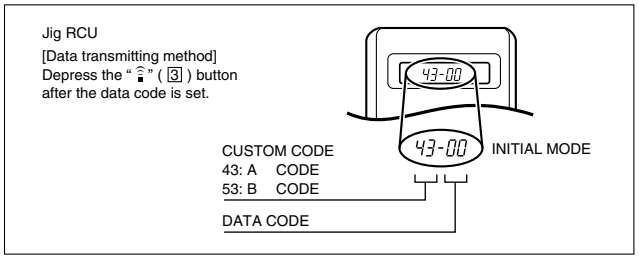

Fig. 1-7a Jig RCU [PTU94023B]

1.7.1 Displaying the EMG information

(1) Transmit the code "59" from the Jig RCU.
The FDP shows the EMG content in the form of "E: * * : * * ".

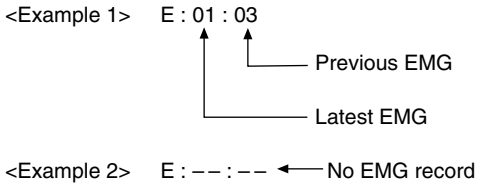

(2) Transmit the code "59" from the Jig RCU again.
The FDP shows the EMG detail information <1> in the form of " * 1 : * 2 : 34 ".

- * 1 : Deck operation mode at the moment of EMG
- * 2 : Mechanism operation mode at the moment of EMG
- 3– : Mechanism sensor information at the moment of EMG
- –4 : Mechanism mode position at the moment of EMG

(3) Transmit the code "59" from the Jig RCU once again.
The FDP shows the EMG detail information <2> in the form of " * 5 : * 6 : * 7 ".

- * 5 : Type of the cassette tape in use <1> .
- * 6 : Winding position of the cassette tape in use
- * 7 : Type of the cassette tape in use <2> (Winding area)

(4) Transmit the code "59" from the Jig RCU once again to reset the display.

Notes:

- ***For the OSD display model, all EMG information are showed by transmitting first code from the Jig RCU.***
- ***For the EMG content, see "1.7.3 EMG content description".***
- ***For the EMG detail information <1> , see "1.7.4 EMG detail information <1> ".***
- ***For the EMG detail information <2> , see "1.7.5 EMG detail information <2>".***

1.7.2 Clearing the EMG history

(1) Display the EMG history.
(2) Transmit the code "36" from the Jig RCU.
(3) Reset the EMG display.

(EMG-02e)

1.7.3 EMG content description

Note: ***EMG contents "E08/E09" are for the model with Dynamic Drum (DD).***

FDP	CONTENT	CAUSE
E01: Loading EMG	When the mechanism mode cannot be changed to another mode even when the loading motor has rotated for more than 4 seconds in the loading direction, [E:01] is identified and the power is turned off.	1. The mechanism is locked in the middle of mode transition. 2. The mechanism is locked at the loading end due to the encoder position reading error during mode transition. 3. Power is not supplied to the loading MDA.
E02: Unloading EMG	When the mechanism mode cannot be changed to another mode even when the loading motor has rotated for more than 4 seconds in the unloading direction, [E:02] is identified and the power is turned off.	1. The mechanism is locked in the middle of mode transition. 2. The mechanism is locked at the unloading end due to the encoder position reading error during mode transition. 3. Power is not supplied to the loading MDA.
E03: Take Up Reel Pulse EMG	When the take-up reel pulse has not been generated for more than 4 seconds in the capstan rotating mode, [E:03] is identified, the pinch rollers are turned off and stopped, and the power is turned off. However, the reel EMG is not detected in STILL/SLOW modes.	1. The take-up reel pulse is not generated in the FWD transport modes (PLAY/FWD SEARCH/FF, etc.) because; 1) The idler gear is not meshed with the take-up reel gear; 2) The idler gear is meshed with the take-up reel gear, but incapable of winding due to too large mechanical load (abnormal tension); 3) The take-up reel sensor does not output the FG pulse. 2. The supply reel pulse is not generated in the REV transport modes (REV SEARCH/REW, etc.) because; 1) The idler gear is not meshed with the supply reel gear. 2) The idler gear is meshed with the supply reel gear, but incapable of winding due to too large a mechanical load (abnormal tension); 3) The supply reel sensor does not output the FG pulse. 3. Power is not supplied to the reel sensors.
E04: Drum FG EMG	When the drum FG pulse has not been input for more than 3 seconds in the drum rotating mode, [E:04] is identified, the pinch rollers are turned off and stopped, and the power is turned off.	1. The drum could not start or the drum rotation has stopped due to too large a load on the tape, because; 1) The tape tension is abnormally high; 2) The tape is damaged or a foreign object (grease, etc.) adheres to the tape. 2. The drum FG pulse did not reach the System controller CPU because; 1) The signal circuit is disconnected in the middle; 2) The FG pulse generator (hall device) of the drum is faulty. 3. The drum control voltage (DRUM CTL V) is not supplied to the MDA. 4. Power is not supplied to the drum MDA.
E05: Cassette Eject EMG	When the eject operation does not complete in 3 seconds after the start, [E:05] is identified, the pinch rollers are turned off and stopped, and the power is turned off. When the cassette insertion operation does not complete in 3 seconds after the start, the cassette is ejected. In addition, when the operation does not complete within 3 seconds after the start, [E:05] is also identified and the power is turned off immediately.	1. The cassette cannot be ejected due to a failure in the drive mechanism of the housing. 2. When the housing load increases during ejection, the loading motor is stopped because of lack of headroom in its drive torque. Housing load increasing factors: Temperature environment (low temperature, etc.), mechanism wear or failure. 3. The sensor/switch for detecting the end of ejection are not functioning normally. 4. The loading motor drive voltage is lower than specified or power is not supplied to the motor (MDA). 5. When the user attempted to eject a cassette, a foreign object (or perhaps the user's hand) was caught in the opening of the housing.
E06: Capstan FG EMG	When the capstan FG pulse has not been generated for more than 1 second in the capstan rotating mode, [E:06] is identified, the pinch rollers are turned off and stopped, and the power is turned off.However, the capstan EMG is not detected in STILL/SLOW/FF/REW modes.	1. The capstan could not start or the capstan rotation has stopped due to too large a load on the tape, because; 1) The tape tension is abnormally high (mechanical lock); 2) The tape is damaged or a foreign object (grease, etc.) is adhered to the tape (occurrence of tape entangling, etc.). 2. The capstan FG pulse did not reach the System controller CPU because; 1) The signal circuit is disconnected in the middle; 2) The FG pulse generator (MR device) of the capstans is faulty. 3. The capstan control voltage (CAPSTAN CTL V) is not supplied to the MDA. 4. Power is not supplied to the capstan MDA.
E07: SW Power Short-Circuit EMG	When short-circuiting of the SW power supply with GND has lasted for 0.5 second or more, [E:07] is identified, all the motors are stopped and the power is turned off.	1. The SW 5 V power supply circuit is shorted with GND. 2. The SW 12 V power supply circuit is shorted with GND.
E08: DD Initialized (Absolute Position Sensor) EMG	When DD tilting does not complete in 4 seconds, [E:08] is identified, the tilt motor is stopped and the power is turned off.	1. The absolute value sensor is defective. (The soldered parts have separated.) 2. The pull-up resistor at the absolute sensor output is defective. (The soldered parts have separated.) 3. Contact failure or soldering failure of the pins of the connector (board-to-board) to the absolute value sensor. 4. The absolute value sensor data is not sent to the System Controller CPU.
E09: DD FG EMG	When the DD FG pulse is not generated within 2.5 seconds, [E:09] is identified, the tilt motor is stopped and the power is turned off.	1. The FG sensor is defective. (The soldered parts have separated.) 2. The pull-up resistor at the FG sensor output is defective. (The soldered parts have separated.) 3. Contact failure or soldering failure of the pins of the connector (board-to-board) to the FG sensor. 4. The power to the sensor is not supplied. (Connection failure/soldering failure) 5. The FG pulse is not sent to the System Controller CPU. 6. The tilt motor is defective. (The soldered parts have separated.) 7. The drive power to the tilt motor is not supplied. (Connection failure/soldering failure) 8. The tilt motor drive MDA - IC is defective. 9. Auto-recovery of the DD tilting cannot take place due to overrun.
E0A: Supply Reel Pulse EMG	When the supply reel pulse has not been generated for more than 10 seconds in the capstan rotating mode, [E:0A] is identified and the cassette is ejected (but the power is not turned off). However, note that the reel EMG is not detected in the SLOW/STILL mode.	1. The supply reel pulse is not generated in the FWD transport mode (PLAY/FWD SEARCH/FF, etc.) because; 1) PLAY/FWD or SEARCH/FF is started while the tape in the inserted cassette is cut in the middle; 2) A mechanical factor caused tape slack inside and outside the supply reel side of the cassette shell. In this case, the supply reel will not rotate until the tape slack is removed by the FWD transport, so the pulse is not generated until then; 3) The FG pulse output from the supply reel sensor is absent. 2. The take-up reel pulse is not generated in the REV transport mode (REV SEARCH/REW, etc.). 1) REV SEARCH/REW is started when the tape in the inserted cassette has been cut in the middle; 2) A mechanical factor caused tape slack inside and outside the take-up reel side of the cassette shell. In this case, the supply reel will not rotate until the tape slack is removed by the REV transport, so the pulse will not be generated until that time; 3) The FG pulse output from the take-up reel sensor is absent. 3. The power to a reel sensor is not supplied.
EC1 or EU1: Head clog warning	Presupposing the presence of the control pulse output in the PLAY mode, when the value obtained by mixing the two V.FM output channels (without regard to the A.FM output) has remained below a certain threshold level for more than 10 seconds, [E:C1] or [E:U1] is identified and recorded in the emergency history. During the period in which a head clog is detected, the FDP and OSD repeat the "3-second warning display" and "7-second noise picture display" alternately. EMG code : "E:C1" or "E:U1" / FDP : "U:01" / OSD : "Try cleaning tape." or "Use cleaning cassette." The head clog warning is reset when the above-mentioned threshold has been exceeded for more than 2 seconds or the mode is changed to another mode than PLAY.	

Table 1-7-3a

1.7.4 EMG detail information <1>

The status (electrical operation mode) of the VCR and the status (mechanism operation mode/sensor information) of the mechanism in the latest EMG can be confirmed based on the figure in EMG detail information <1> .

[FDP/OSD display]

*1 : *2 : 34

*1 : Deck operation mode at the moment of EMG
*2 : Mechanism operation mode at the moment of EMG
3– : Mechanism sensor information at the moment of EMG
–4 : Mechanism mode position at the moment of EMG

Note:

- ***For EMG detailed information <1>, the content of the code that is shown on the FDP (or OSD) differs depending on the parts number of the system control microprocessor (IC3001) of the VCR. The system control microprocessor parts number starts with two letters, refer these to the corresponding table.***

***1 : Deck operation mode**
[Common table of MN*, HD* and M3*]

Display		Deck operation mode
MN*/M3*	HD*	
00	-	Mechanism being initialized
01	00	STOP with pinch roller pressure off (or tape present with P.OFF)
02	01	STOP with pinch roller pressure on
03	-	POWER OFF as a result of EMG
04	04	PLAY
0C	0E	REC
10	11	Cassette ejected
20	22	FF
21	-	Tape fully loaded, START sensor ON, short FF
22	-	Cassette identification FWD SEARCH before transition to FF (SP x7-speed)
24	26	FWD SEARCH (variable speed) including x2-speed
2C	2E	INSERT REC
40	43	REW
42	-	Cassette identification REV SEARCH before transition to REW (SP x7-speed)
44	47	REV SEARCH (variable speed)
4C	4C	AUDIO DUB
6C	6E	INSERT REC (VIDEO + AUDIO)
84	84	FWD STILL / SLOW
85	85	REV STILL / SLOW
8C	8F	REC PAUSE
8D	-	Back spacing
8E	-	Forward spacing (FWD transport mode with BEST function)
AC	AF	INSERT REC PAUSE
AD	-	INSERT REC back spacing
CC	CD	AUDIO DUB PAUSE
CD	-	AUDIO DUB back spacing
EC	EF	INSERT REC (VIDEO + AUDIO) PAUSE
ED	-	INSERT REC (VIDEO + AUDIO) back spacing

***2 : Mechanism operation mode**
[Common table of MN* and M3*]

Display		Mechanism operation mode
MN*	M3*	
00	00	Command standby (Status without executing command)
02	02	POWER OFF by EMG occurrence
04	04	Moving to the adjacent position in the LOAD direction
06	06	Moving to the adjacent position in the UNLOAD direction
08	08	Cassette ejection being executed / Cassette housing ejection being executed
-	0A	Mode transition to STOP with cassette ejection end
0A	0C	Cassette insertion being executed
0C	0E	Tape being loaded
0E	10	Tape being unloaded
10	12	Mode transition to STOP with pinch roller compression ON
12	14	Mode transition to STOP with pinch roller compression OFF
14	16	Mode transition to STOP with pinch roller compression OFF as a result of POWER OFF
16	18	Mode transition to STOP with pinch roller compression ON as a result of POWER ON
18	1A	Mode transition to PLAY
1A	1C	Mode transition to FWD SEARCH
1C	1E	Mode transition to REC
1E	20	Mode transition to FWD STILL / SLOW
20	22	Mode transition to REV STILL / SLOW
22	24	Mode transition to REV SEARCH
24	26	Mode transition from FF / REW to STOP
26	28	Mode transition to FF
28	2A	Mode transition to REW
2A	2C	4 sec. of REV as a result of END sensor going ON during loading
2C	2E	Short FF / REV as a result of END sensor going ON during unloading
2E	30	Mechanism position being corrected due to overrun
80	80	Mechanism in initial position (Dummy command)

[Table of HD*]

Display	Mechanism operation mode
00	STOP with pinch roller pressure off
01	STOP with pinch roller pressure on
02	U/L STOP (or tape being loaded)
04	PLAY
05	PLAY (x1-speed playback using JOG)
0E	REC
11	Cassette ejected
22	FF
26	FWD SEARCH (variable speed) including x2-speed
2E	INSERT REC
43	REW
47	REV SEARCH
4C	AUDIO DUB
6E	INSERT REC (VIDEO + AUDIO)
84	FWD STILL/SLOW
85	REV STILL/SLOW
8F	REC PAUSE
AF	INSERT REC PAUSE
C7	REV SEARCH (x1-speed reverse playback using JOG)
CD	AUDIO DUB PAUSE
EF	INSERT REC (VIDEO + AUDIO) PAUSE
F0	Mechanism being initialized
F1	POWER OFF as a result of EMG
F2	Cassette being inserted
F3	Cassette being ejected
F4	Transition from STOP with pinch roller pressure on to STOP with pinch roller pressure off
F5	Transition from STOP with pinch roller pressure on to PLAY
F6	Transition from STOP with pinch roller pressure on to REC
F7	Cassette type detection SEARCH before FF/REW is being executed
F8	Tape being unloaded
F9	Transition from STOP with pinch roller pressure off to STOP with pinch roller pressure on
FA	Transition from STOP with pinch roller pressure off to FF/REW
FB	Transition from STOP with pinch roller pressure off to REC.P (T.REC,etc.)
FC	Transition from STOP with pinch roller pressure off to cassette type detection SEARCH
FD	Short REV being executed after END sensor on during unloading
FE	Tension loosening being executed after tape loading (STOP with pinch roller pressure on)

3– : Mechanism sensor information
[Common table of MN*, HD* and M3*]

Display	Mechanism sensor information				
	MN* / HD* S-VHS SW	M3* CASS SW	REC safety SW	Start sensor	End sensor
0-	VHS	Cassette insertion	Tab broken	ON	ON
1-	VHS	Cassette insertion	Tab broken	ON	OFF
2-	VHS	Cassette insertion	Tab broken	OFF	ON
3-	VHS	Cassette insertion	Tab broken	OFF	OFF
4-	VHS	Cassette insertion	Tab present	ON	ON
5-	VHS	Cassette insertion	Tab present	ON	OFF
6-	VHS	Cassette insertion	Tab present	OFF	ON
7-	VHS	Cassette insertion	Tab present	OFF	OFF
8-	S-VHS	Cassette ejection	Tab broken	ON	ON
9-	S-VHS	Cassette ejection	Tab broken	ON	OFF
A-	S-VHS	Cassette ejection	Tab broken	OFF	ON
B-	S-VHS	Cassette ejection	Tab broken	OFF	OFF
C-	S-VHS	Cassette ejection	Tab present	ON	ON
D-	S-VHS	Cassette ejection	Tab present	ON	OFF
E-	S-VHS	Cassette ejection	Tab present	OFF	ON
F-	S-VHS	Cassette ejection	Tab present	OFF	OFF

–4 : Mechanism mode position
[Common table of MN*, HD* and M3*]

Display			Mechanism mode position
MN*	HD*	M3*	
-0	-7	-	Initial value
-1	-0	-	EJECT position
-	-	-0	EJECT position (Cassette housing drive mode)
-2	-7	-	Housing operating
-	-	-1	Between EJECT and U / L STOP
-3	-1	-2	U / L STOP position
-	-	-3	Guide arm drive position
-4	-7	-4	Tape being loaded / unloaded (When the pole base is located on the front side of the position just beside the drum)
-5	-2	-5	Tape being loaded / unloaded (When the pole base is located on the rear side of the position just beside the drum)
-6	-7	-6	Pole base compressed position
-7	-3	-F	FF / REW position
-8	-7	-F	Between FF / REW and STOP with pinch roller compression ON
-9	-4	-F	STOP with pinch roller compression OFF
-A	-7	-E	Between STOP with pinch roller compression OFF and REV
-B	-5	-	REV (REV STILL / SLOW) position
-	-	-D	REV position
-	-	-C	Between REV and REV STILL / SLOW
-	-	-B	REV STILL / SLOW position
-C	-7	-	Between REV and FWD
-	-	-A	Between REV STILL / SLOW and FWD STILL / SLOW
-D	-6	-	FWD (FWD STILL / SLOW) position
-	-	-9	FWD STILL / SLOW position
-E	-7	-	Between FWD and PLAY
-	-	-8	Between FWD STILL / SLOW and PLAY
-F	-6	-7	PLAY position

Note:

- ***In the case of the "HD*" microprocessor, as the display is always "-7" at any intermediate position between modes, the position of transitory EMG may sometimes not be located.***

1.7.5 EMG detail information <2>

The type of the cassette tape and the cassette tape winding position can be confirmed based on the figure in EMG detail information <2> .

[FDP/OSD display]

*5 : *6 : *7

*5 : Type of the cassette tape in use <1>
*6 : Winding position of the cassette tape in use
*7 : Type of the cassette tape in use <2> (Winding area)

Note:

- ***EMG detail information <2> is the reference information stored using the remaining tape detection function of the cassette tape. As a result, it may not identify cassette correctly when a special cassette tape is used or when the tape has variable thickness.***

*5 : Cassette tape type <1>

Display	Cassette tape type <1>
00	Cassette type not identified
16	Large reel/small reel (T-0 to T-15/T-130 to T-210) not classified
82	Small reel, thick tape (T-120) identified/thin tape (T-140) identified
84	Large reel (T-0 to T-60) identified
92	Small reel, thick tape (T-130) identified/thin tape (T-160 to T-210) identified
93	Small reel, thick tape/C cassette (T-0 to T-100/C cassette) not classified
C3	Small reel, thick tape/C cassette (T-0 to T-100/C cassette) being classified
D3	Small reel, thick tape/C cassette (T-0 to T-100/C cassette) being classified
E1	C cassette, thick tape (TC-10 to TC-20) identified
E2	Small reel, thick tape (T-0 to T-100) identified
E9	C cassette, thin tape (TC-30 to TC-40) identified
F1	C cassette, thick tape/thin tape (TC-10 to TC-40) not classified

Notes:

- ***Cassette tape type <1> is identified a few times during mode transition and the identification count is variable depending on the cassette tape type. If an EMG occurs in the middle of identification, the cassette tape type may not be able to be identified.***
- ***If other value than those listed in the above table is displayed, the cassette tape type is not identified.***

*6 : Cassette tape winding position

The cassette tape winding position at the moment of EMG is displayed by dividing the entire tape (from the beginning to the end) in 22 sections using a hex number from “00” to “15”.

“00” : End of winding
“15” : Beginning of winding
“FF or ––” : Tape position not identified

*7 : Cassette tape type <2> (Winding area)

Display	Cassette tape type <2>	
00	Cassette type not identified	
07	Small reel, thick tape	T-5
08 - 0E	C cassette, thick tape	TC-10
09 - 15	C cassette, thick tape	TC-20P
0A - 0B	Small reel, thick tape	T-20
0A - 16	C cassette, thin tape	TC-30
0A - 16	C cassette, thin tape	TC-40
0D - 0F	Small reel, thick tape	T-40
11 - 14	Small reel, thick tape	T-60
15 - 18	Small reel, thick tape	T-80 / DF-160
17 - 1A	Small reel, thick tape	T-90 / DF-180
19 - 1D	Small reel, thick tape	T-100
1D - 21	Small reel, thick tape	T-120 / DF-240
1E - 1F	Small reel, thin tape	T-140
1F - 23	Small reel, thick tape	T-130
21 - 23	Small reel, thin tape	T-160
21 - 23	Small reel, thin tape	T-168
22 - 24	Small reel, thick tape	DF-300
22 - 24	Small reel, thin tape	T-180 / DF-360
22 - 24	Small reel, thin tape	T-210 / DF-420
22 - 23	Large reel	T-5
23 - 24	Large reel	T-10
25 - 26	Large reel	T-20
27 - 29	Large reel	T-30
29 - 2B	Large reel	T-40
2D - 2F	Large reel	T-60

Note:

- ***The values of cassette tape type <2> in the above table are typical values with representative cassette tapes.***

SECTION 2
MECHANISM ADJUSTMENT

2.1 Before starting repair and adjustment

2.1.1 Precautions

(1) Unplug the power cord plug of the VCR before using your soldering iron.
(2) Take care not to cause any damage to the conductor wires when plugging and unplugging the connectors.
(3) Do not randomly handle the parts without identifying where the trouble is.
(4) Exercise enough care not to damage the lugs, etc. during the repair work.
(5) When reattaching the front panel assembly, make sure that the door opener of the cassette holder assembly is lowered in position prior to the reinstallation. (See SECTION 1 DISASSEMBLY.)
(6) When using the Jig RCU, it is required to set the VCR to the Jig RCU mode (the mode in which codes from the Jig RCU can be received). (See SECTION 1 DISASSEMBLY.)

2.1.2 Checking for proper mechanical operations

Enter the mechanism service mode when you want to operate the mechanism when no cassette is loaded. (See SECTION 1 DISASSEMBLY.)

2.1.3 Manually removing the cassette tape

1. In case of electrical failures

If you cannot remove the cassette tape which is loaded because of any electrical failure, manually remove it by taking the following steps.

(1) Unplug the power cord plug from the power outlet.
(2) Refer to the disassembly procedure and perform the disassembly of the major parts before removing the drum assembly.
(3) Unload the pole base assembly by manually turning the loading motor of the mechanism assembly toward the front. In doing so, hold the tape by the hand to keep the slack away from any grease. (See Fig.2-1-3a.)
(4) Bring the pole base assembly to a pause when it reaches the position where it is hidden behind the cassette tape.
(5) Move the top guide toward the drum while holding down the lug (A) of the bracket retaining the top guide. Likewise hold part (B) down and remove the top guide.
Section (C) of the top guide is then brought under the cassette lid. Then remove the top guide by pressing the whole cassette tape down. (See Fig.2-1-3b.)
(6) Remove the cassette tape by holding both the slackened tape and the cassette lid.
(7) Take up the slack of the tape into the cassette. This completes removal of the cassette tape.

Note:

- ***For the disassembly procedure of the major parts and details of the precautions to be taken, see "SECTION 1 DISASSEMBLY".***

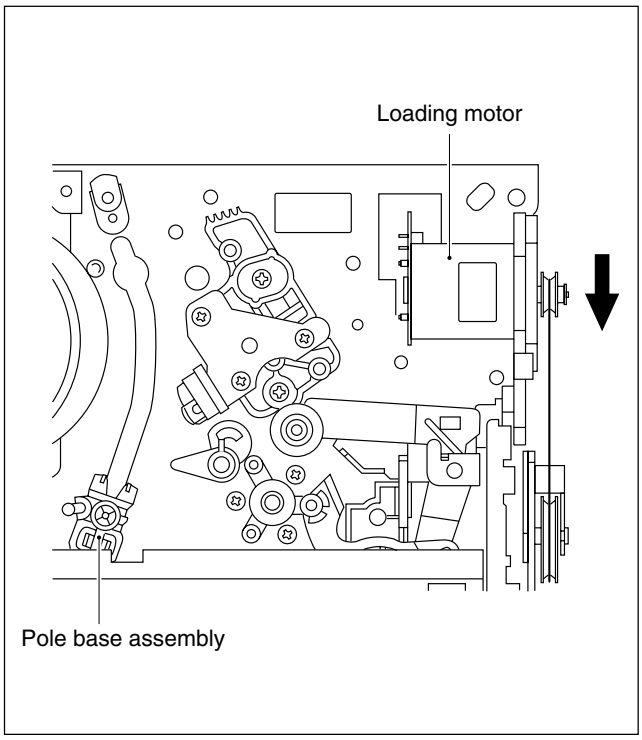

Fig. 2-1-3a

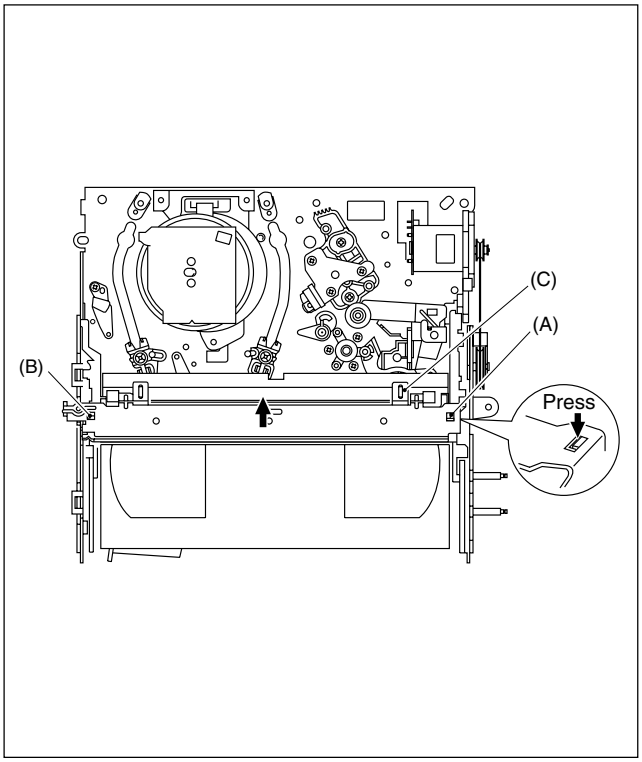

Fig. 2-1-3b

2. In case of mechanical failure

If you cannot remove the cassette tape which is loaded because of any mechanical failure, manually remove it by taking the following steps.

(1) Unplug the power cable and remove the top cover, front panel assembly and others so that the mechanism assembly is visible. (See SECTION 1 DASASSEMBLY.)
(2) While keeping the tension arm assembly of the mechanism assembly free from tension, pull the tape on the pole base assembly (supply or take-up side) out of the guide roller. (See Fig.2-1-3c.)
(3) Take the spring of the pinch roller arm assembly off the hook of the press lever assembly, and detach it from the tape. (See Fig.2-1-3d.)
(4) In the same way as in the electrical failure instructions in 2.1.3-1(5), remove the top guide.
(5) Raise the cassette tape cover. By keeping it in that position, draw out the cassette tape case from the cassette holder and take out the tape.
(6) By hanging the pinch roller arm assembly spring back on the hook, take up the slack of the tape into the cassette.

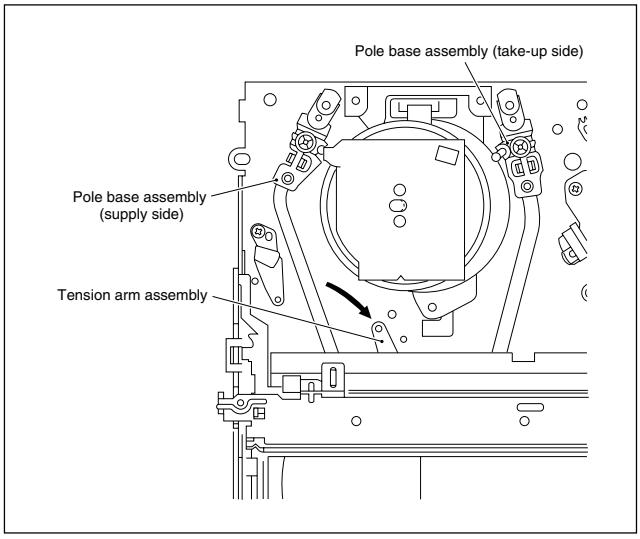

Fig. 2-1-3c

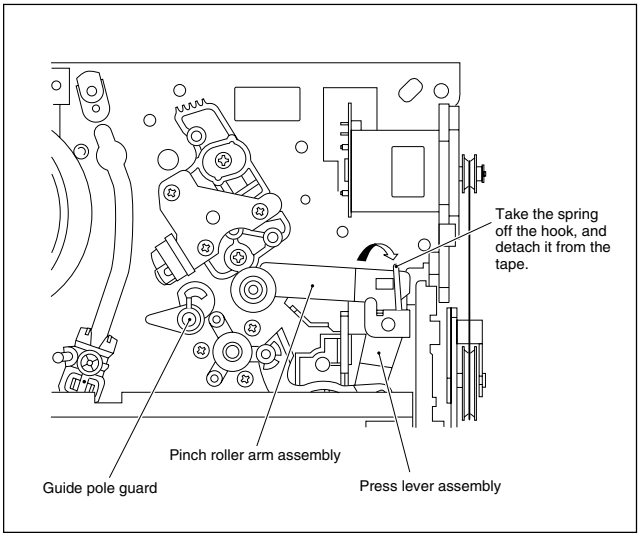

Fig. 2-1-3d

2.1.4 Jigs and tools required for adjustment

Roller driver PTU94002	A/C head positioning tool PTU94010	Torque gauge PUJ48075-2
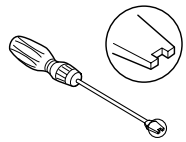		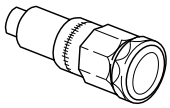
Back tension cassette gauge PUJ48076-2	Jig RCU PTU94023B	
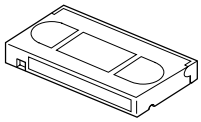	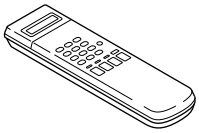	
Alignment tape (SP, stairstep, NTSC) MHP	Alignment tape (EP, stairstep, NTSC) MHP-L	
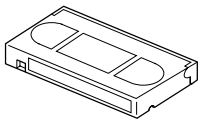	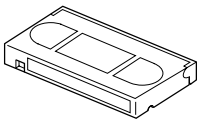	

2.1.5 Maintenance and inspection

1. Location of major mechanical parts

In this chapter, the two mechanism speeds are described by comparing the speeds of the standard type and the high-speed FF/REW type.
It is possible to distinguish between these two types of mechanism by the diameters of their capstan pulleys.
The capstan pulley diameter for the standard type is approx. 32 mm.
The capstan pulley diameter for the high-speed FF/REW type is approx. 43 mm.
For information on the different parts used in the two mechanism types, please refer to the “Replacement of major parts”.

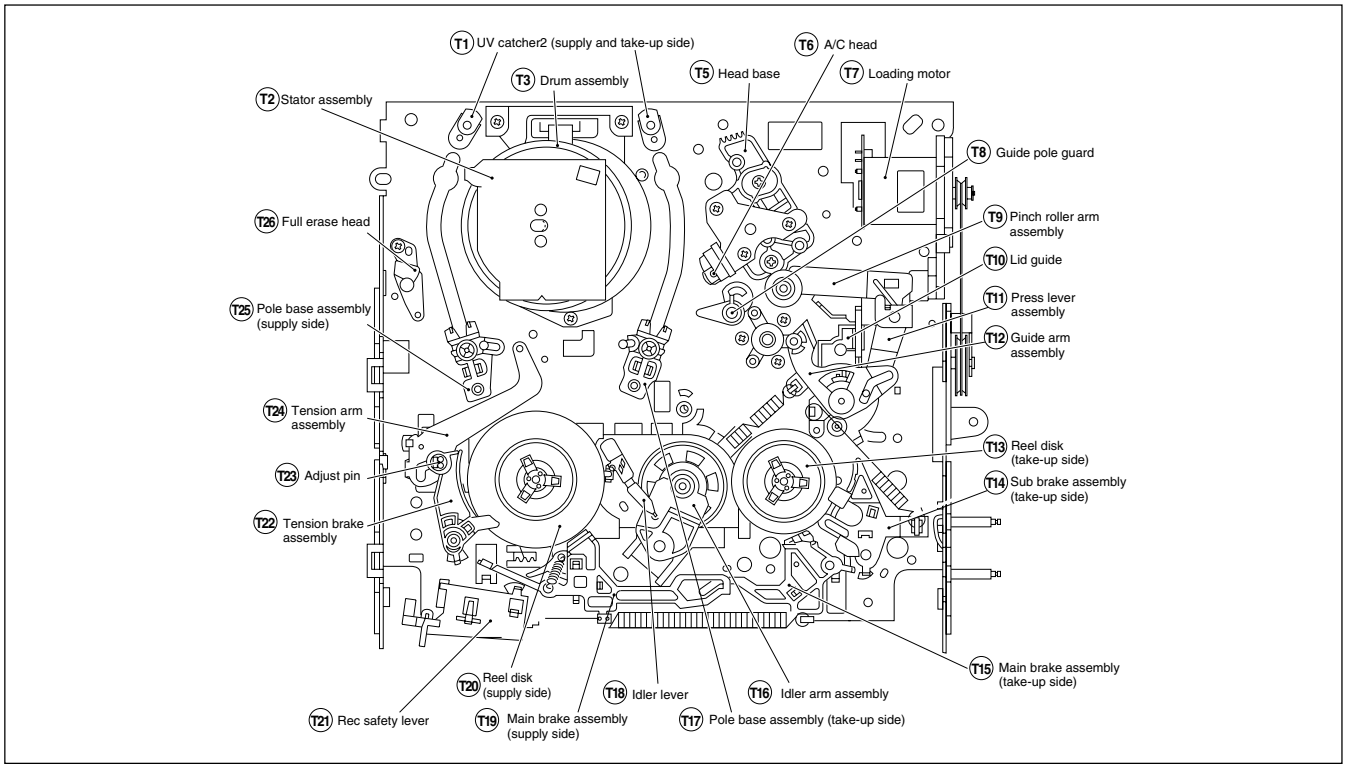

Fig. 2-1-5a Mechanism assembly top side

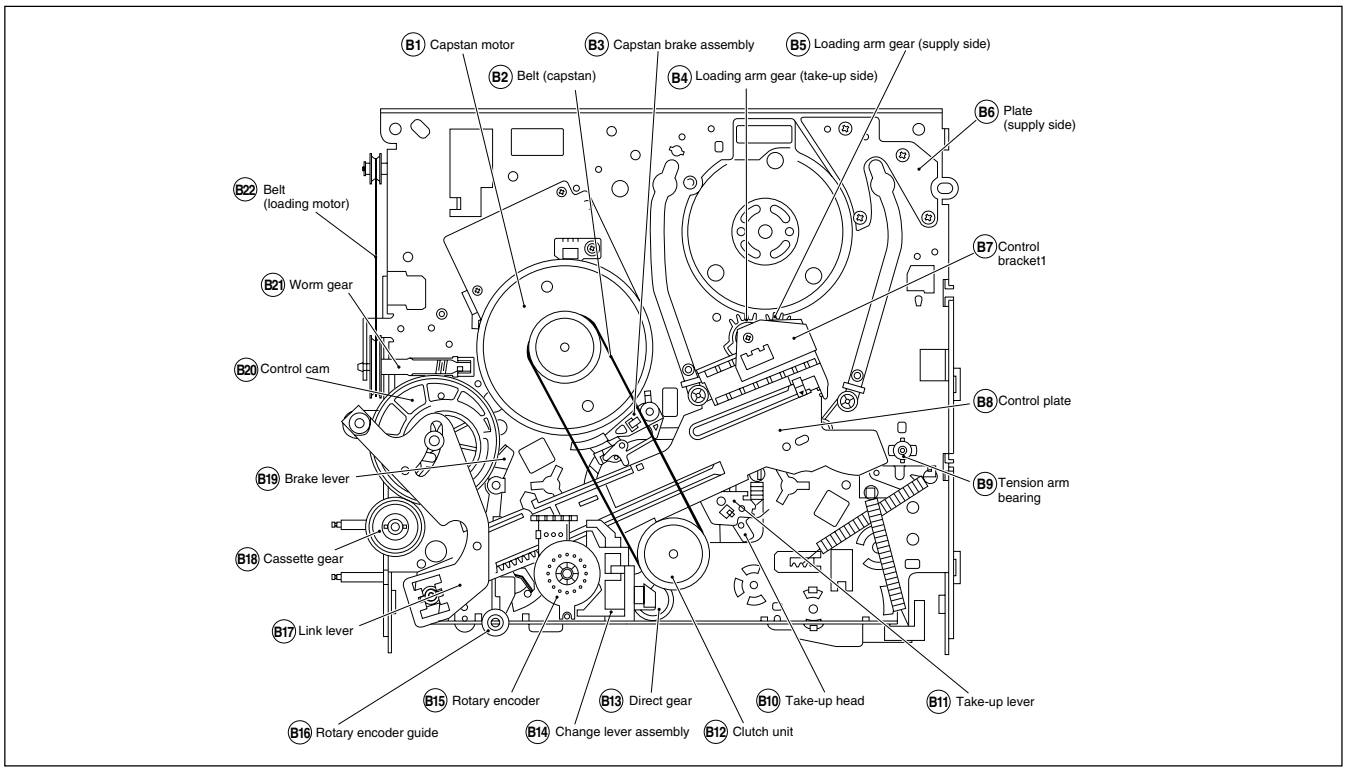

Fig. 2-1-5b Mechanism assembly bottom side

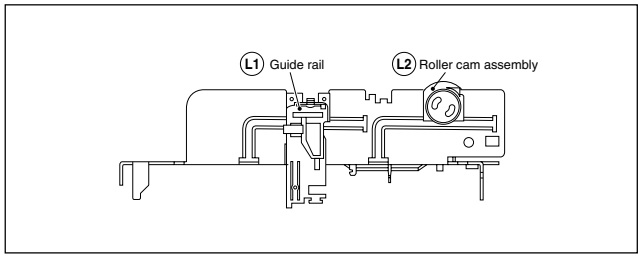

Fig. 2-1-5c Mechanism assembly left side

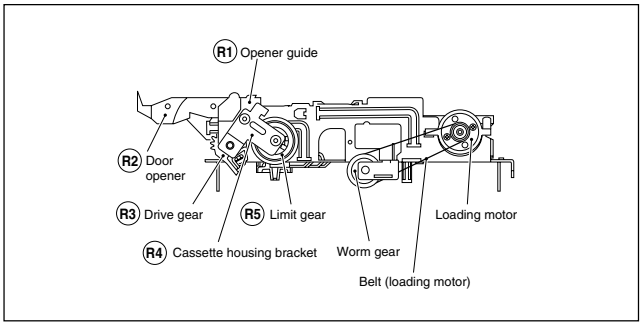

Fig. 2-1-5d Mechanism assembly right side

2. Cleaning

Regular cleaning of the transport system parts is desirable but practically impossible. So make it a rule to carry out cleaning of the tape transport system whenever the machine is serviced.

When the video head, tape guide and/or brush get soiled, the playback picture may appear inferior or at worst disappear, resulting in possible tape damage.

(1) When cleaning the upper drum (especially the video head), soak a piece of closely woven cloth or Kimu-wipe with alcohol and while holding the cloth onto the upper drum by the fingers, turn the upper drum counterclockwise.

Note:

- ***Absolutely avoid sweeping the upper drum vertically as this will cause damage to the video head.***

(2) To clean the parts of the tape transport system other than the upper drum, use a piece of closely woven cloth or a cotton swab soaked with alcohol.

(3) After cleaning, make sure that the cleaned parts are completely dry before using the video tape.

3. Lubrication

With no need for periodical lubrication, you have only to lubricate new parts after replacement. If any oil or grease on contact parts is soiled, wipe it off and newly lubricate the parts.

Note:

- ***See the "mechanism assembly" diagram of the parts list for the lubricating or greasing spots, and for the types of oil or grease to be used.***

4. Suggested servicing schedule for main components

The following table indicates the suggested period for such service measures as cleaning,lubrication and replacement. In practice, the indicated periods will vary widely according to environmental and usage conditions.However, the indicated components should be inspected when a set is brought for service and the maintenance work performed if necessary. Also note that rubber parts may deform in time,even if the set is not used.

System	Parts Name	Operation Hours	
		~1000H	~2000H
Tape transport	Upper drum assembly	★○	○
	A/C head	★○	★○
	Lower drum assembly	★	★○
	Pinch roller arm assembly	★	★
	Full erase head	★	★
	Tension arm assembly	★	★
	Capstan motor (Shaft)	★	★
	Guide arm assembly	★	★
Drive	Capstan motor		○
	Capstan brake assembly		○
	Main brake assembly		○
	Belt (Capstan)	○	○
	Belt (Loading motor)		○
	Loading motor		○
	Clutch unit		○
	Worm gear		○
	Control plate		○
Other	Brush	★○	★○
	Tension brake assembly	○	○
	Rotary encoder		○

★ : Cleaning

○ : Inspection or replacement if necessary

Table 2-1-5a

5. Disassembling procedure table

The following table indicates the order in which parts are removed for replacement. To replace parts, remove them in the order of 1 to 18 as shown in the table. To install them, reverse the removal sequence.

The symbols and numbers preceding the individual part names represent the numbers in the "Location of major mechanical parts" table. Also, the "T", "B", and "T/B" on the right of each part name shows that the particular part is removed from the front, from the back, and from both sides of the mechanism, respectively.

Symbols and numbers	Removal parts / (Reference items) Replacement parts	Front (T)/Back (B) of mechanism	Number of removal steps	Guide rail (L1)	Roller cam assembly (L2)	Cassette housing bracket (R4)	Opener guide (R1)	Relay gear (—)	Cassette holder assembly (—)	Drive gear (R3)	Drive arm (—)	Pinch roller arm assembly (T9)	Guide arm assembly (T12)	Press lever assembly (T11)	UV catcher2 (T1)	Rotary encoder (B15)	Clutch unit (B12)	Change lever assembly (B14)	Direct gear (B13)	Coupling gear (—)	Link lever (B17)	Worm gear (B21)	Control bracket1 (B7)	Control plate (B8)	Loading arm gear (supply side) (B5)	Loading arm gear (take-up side) (B4)	Take-up lever (B11)	Sub brake assembly (take-up side) (T14)	Main brake assembly (take-up side) (T15)	Reel disk (take-up side) (T13)	Tension brake assembly (T22)	Tension arm assembly (T24)	Idler lever (T18)	Brake lever (*1) (B19)
L1	2.2.3 Guide rail	T	1																															
L2	2.2.3 Roller cam assembly	T	1																															
R4	2.2.3 Cassette housing bracket	T	1																															
R1	2.2.3 Opener guide	T	2			1																												
R2	2.2.3 Door opener	T	3			1	2																											
—	2.2.3 Relay gear	T	3			1	2																											
R5	2.2.3 Limit gear	T	3			1	2																											
—	2.2.3 Cassette holder assembly	T	6	1	2	3	4	5																										
R3	2.2.3 Drive gear	T	4			1	2	3																										
—	2.2.3 Drive arm	T	8	1	2	3	4	5	6	7																								
T9	2.2.4 Pinch roller arm assembly	T	1																															
T12	2.2.5 Guide arm assembly	T	1																															
T11	2.2.5 Press lever assembly	T	3									1	2																					
T6	2.2.6 A/C head	T	1																															
T7	2.2.7 Loading motor	T	1																															
B1	2.2.8 Capstan motor	T/B	1																															
T1	2.2.9 UV catcher2	T	1																															
T17	2.2.9 Pole base assembly (take-up side)	T/B	2												1																			
T25	2.2.9 Pole base assembly (supply side)	T/B	2												1																			
B15	2.2.10 Rotary encoder	B	1																															
B12	2.2.11 Clutch unit	B	1																															
B14	2.2.12 Change lever assembly	B	3													1	2																	
B13	2.2.12 Direct gear	B	4													1	2	3																
—	2.2.12 Coupling gear	B	5													1	2	3	4															
—	2.2.12 Clutch gear	B	6													1	2	3	4	5														
B17	2.2.13 Link lever	B	1																															
B18	2.2.14 Cassette gear	B	2																		1													
B20	2.2.14 Control cam	B	2																		1													
B21	2.2.14 Worm gear	B	1																															
T10	- Lid guide	T/B	5									1	2	3								4												
B7	2.2.15 Control bracket1	B	1																															
B8	2.2.15 Control plate	B	6													1	2	3			4		5											
B5	2.2.16 Loading arm gear (supply side)	B	7													1	2	3			4		5	6										
B4	2.2.16 Loading arm gear (take-up side)	B	8													1	2	3			4		5	6	7									
—	2.2.16 Loading arm gear shaft	B	9													1	2	3			4		5	6	7	8								
B11	2.2.17 Take-up lever	T/B	7													1	2	3			4		5	6										
B10	2.2.17 Take-up head	T/B	8													1	2	3			4		5	6			7							
—	2.2.17 Control plate guide	T/B	8													1	2	3			4		5	6			7							
B3	2.2.18 Capstan brake assembly	T/B	7													1	2	3			4		5	6										
T14	2.2.19 Sub brake assembly(take-up side)	T/B	15	1	2	3	4	5	6	7	8					9	10	11			12		13	14										
T15	2.2.20 Main brake assembly(take-up side)	T/B	16	1	2	3	4	5	6	7	8					9	10	11			12		13	14				15						
T19	2.2.20 Main brake assembly(supply side)	T/B	9	1	2	3	4	5	6	7	8																							
T13	2.2.20 Reel disk (take-up side)	T/B	16	1	2	3	4	5	6	7	8					9	10	11			12		13	14				15						
T22	2.2.21 Tension brake assembly	T/B	9	1	2	3	4	5	6	7	8																							
T20	2.2.21 Reel disk (supply side)	T/B	10	1	2	3	4	5	6	7	8																				9			
T24	2.2.21 Tension arm assembly	T/B	10	1	2	3	4	5	6	7	8																				9			
B9	2.2.21 Tension arm bearing	T/B	10	1	2	3	4	5	6	7	8																				9			
T18	2.2.22 Idler lever	T/B	17	1	2	3	4	5	6	7	8					9	10	11			12		13	14							15	16		
T16	2.2.22 Idler arm assembly	T/B	18	1	2	3	4	5	6	7	8					9	10	11			12		13	14							15	16	17	
B19	- Brake lever (*1)	T/B	18	1	2	3	4	5	6	7	8					9	10	11			12		13	14				15	16	17				
B16	- Rotary encoder guide	T/B	19	1	2	3	4	5	6	7	8					9	10	11			12		13	14				15	16	17				18

Table 2-1-5b

Note:

- ***The parts with marked (∗) have different types of mechanisms (standard type or high-speed FF/REW type).***
  - ***∗1 : Uses the standard type mechanism only.***
  - ***∗2 : Uses the high-speed FF/REW type mechanism only.***

2.2 Replacement of major parts

2.2.1 Before starting disassembling (Phase matching between mechanical parts)

The mechanism of this unit is closely linked with the rotary encoder and system controller circuits.
Since the system controller detects the status of mechanical operation in response to phases of the rotary encoder (internal switch positions), the mechanism may not operate properly unless such parts as the rotary encoder, control plate, loading arm gear, control cam, cassette gear, limit gear, relay gear and drive gear are installed in their correct positions.
Especially, this model is not provided with any cassette housing assembly, so that cassette loading and unloading must be accomplished by operation of the cassette holder assembly. The latter is in turn driven by such parts as the drive gear, relay gear and limit gear. Exercise enough care, therefore, to have the phases of all this gear matching one another. (For information on phase matching of the mechanism, see the instructions on how to install individual parts.)
This unit is provided with a mechanism assembly mode. It is therefore necessary to enter this mode for assembling and disassembling procedures.
This mode is usually not in use, manually set it when it is required.

2.2.2 How to set the "Mechanism assembling mode"

Remove the mechanism assembly and place it bottom side up. (See SECTION 1 DISASSEMBLY.) Turn the worm gear toward the front so that the guide hole of the control cam is brought into alignment with the hole at the mechanism assembly chassis. This position renders the mechanism assembling mode operational. Make sure that the control plate is located in alignment with the mark E. (See Fig.2-2-2a.)

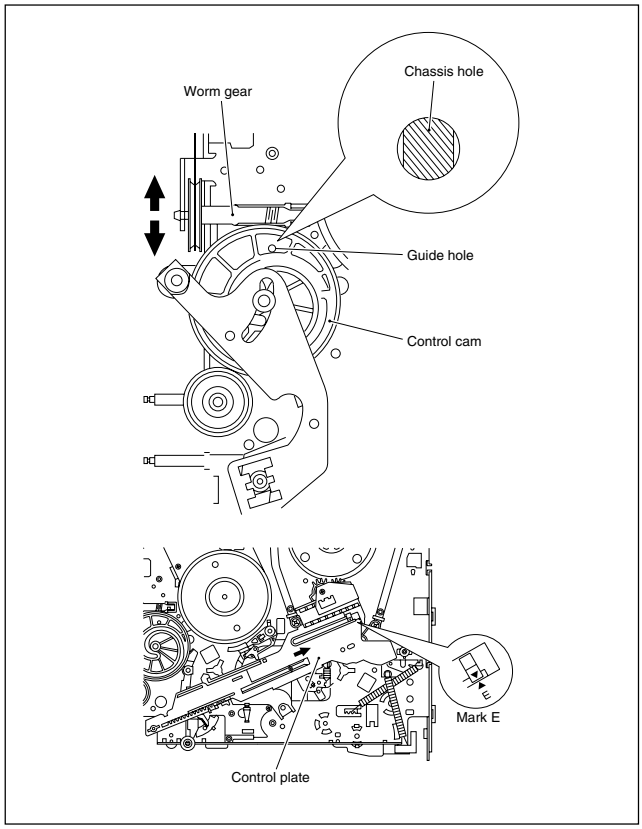

Fig. 2-2-2a

2.2.3 Cassette holder assembly

1. How to remove

(1) Remove the guide rail and roller cam assembly. (See Fig.2-2-3a.)
(3 lugs on the guide rail and one lug on the roller cam assembly)

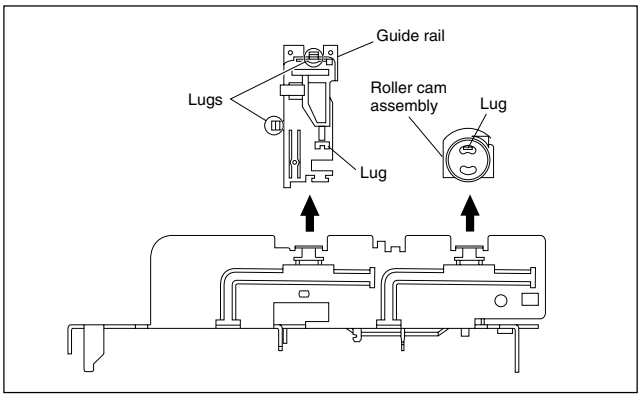

Fig. 2-2-3a

(2) Remove the two slit washers and remove the cassette housing bracket. (See Fig.2-2-3b.)
(3) Remove the opener guide, spring(A), door opener, relay gear and limit gear. (See Fig.2-2-3b.)

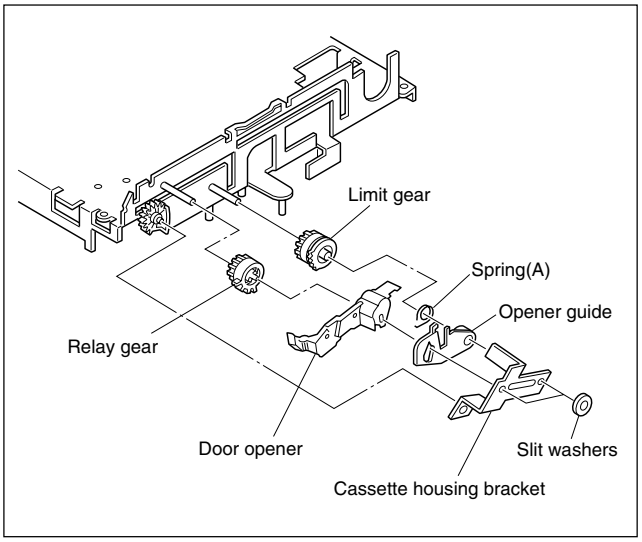

Fig. 2-2-3b

(4) While swinging the lock levers (R) and (L) of the cassette holder assembly toward the front, slide the cassette holder assembly until its legs come to where the guide rail and the roller cam assembly have been removed (so that the drive arm is upright). (See Fig.2-2-3c.)

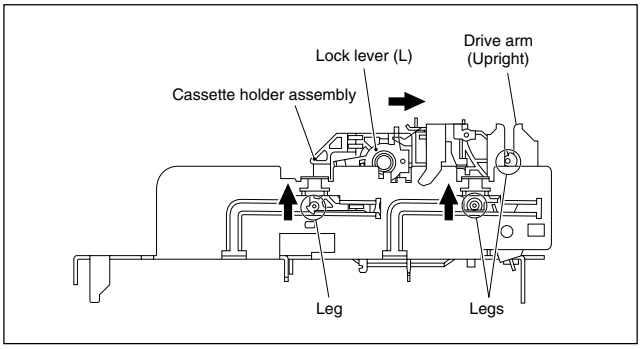

Fig. 2-2-3c

(5) While holding the left side of the cassette holder, lift the cassette holder assembly so that the three legs on the left side are all released. Then pull the legs (A) and (B) on the right side out of the rail and also pull up the leg(C). (See Fig.2-2-3d and Fig.2-2-3e.)
(6) Draw out the drive gear, and remove the drive arm.

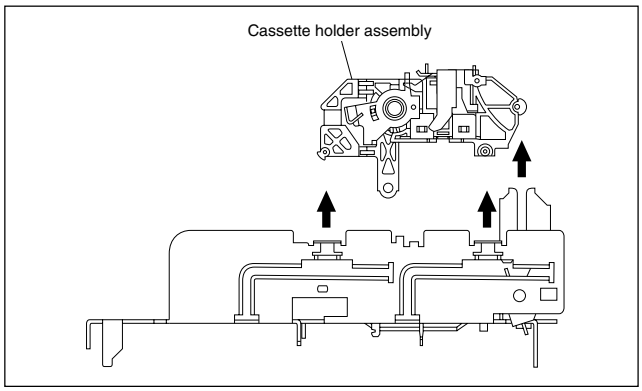

Fig. 2-2-3d

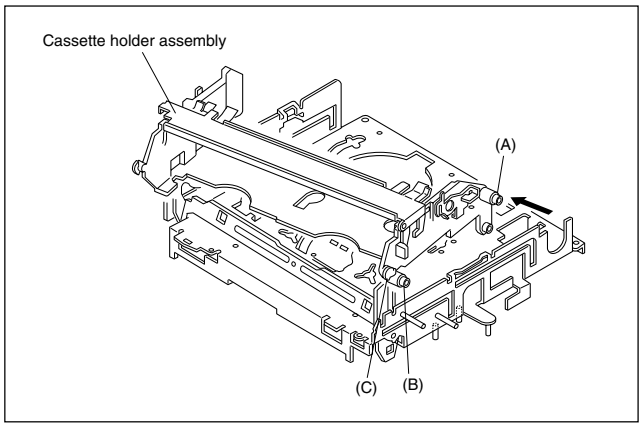

Fig. 2-2-3e

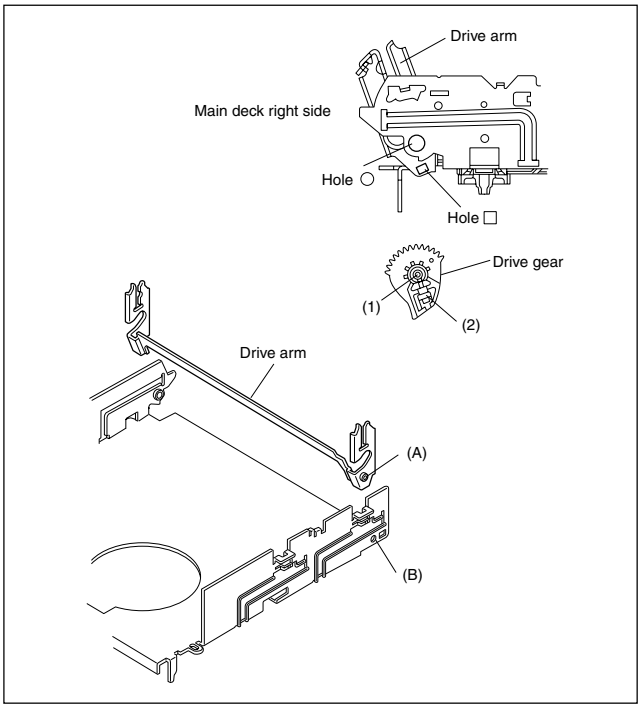

Fig. 2-2-3f

2. How to install (Phase matching)

(1) Insert the section (A) of the drive arm into the section (B) of the main deck.
(2) Insert the section (1) of the drive gear into the round hole, and the section (2) into the square hole on the drive arm. (See Fig.2-2-3f.)
(3) Hold the drive arm upright and fit the leg (C) on the right side of the cassette holder assembly into the groove. (See Fig.2-2-3g.)
(4) While swinging the lock lever (R) of the cassette holder assembly toward the front, put the legs (A) and (B) into the rail. (See Fig.2-2-3g.)
(5) Drop the three legs on the left side of the cassette holder assembly into the groove at one time. (See Fig.2-2-3h.)
(6) Slide the whole cassette holder assembly toward the front to bring it to the eject end position.
(7) Install the limit gear so that the notch on the outer circumference of the limit gear is brought into alignment with the guide hole on the main deck. (See Fig.2-2-3i.)
(8) Install so that the notch on the periphery of the relay gear is aligned with the notch of the main deck and that hole A of the relay gear is aligned with the hole A of the limit gear and that hole B of the relay gear is aligned with the hole B of the drive gear. (See Fig.2-2-3i.)
(9) Install the door opener, opener guide, spring(A) and cassette housing bracket and fasten the two slit washers.

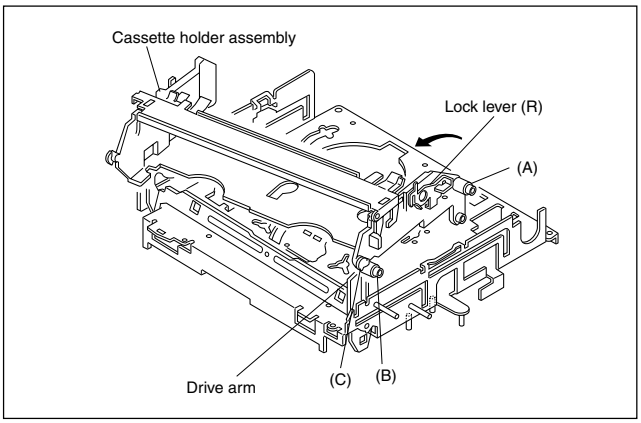

Fig. 2-2-3g

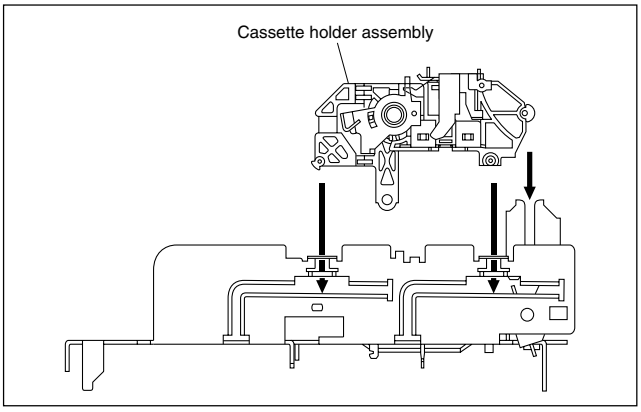

Fig. 2-2-3h

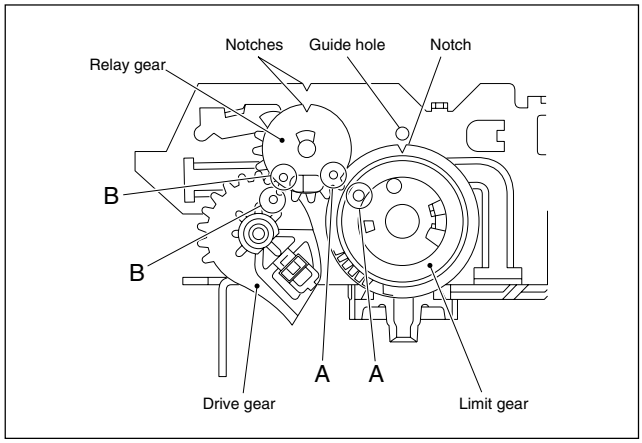

Fig. 2-2-3i

2.2.4 Pinch roller arm assembly

1. How to remove

(1) Remove the spring from the hook of the press lever assembly.
(2) Remove the slit washer and remove the pinch roller seat 2. (See Fig.2-2-4a.)
(3) Remove the pinch roller arm assembly by pulling it up.

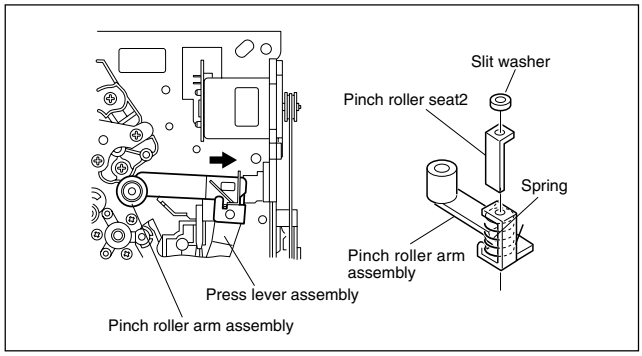

Fig. 2-2-4a

2.2.5 Guide arm assembly and press lever assembly

1. How to remove

(1) Remove the spring and expand the lug of the lid guide in the arrow-indicated direction. Then remove the guide arm assembly by pulling it up.
(2) Remove the press lever assembly by pulling it up. (See Fig.2-2-5a.)

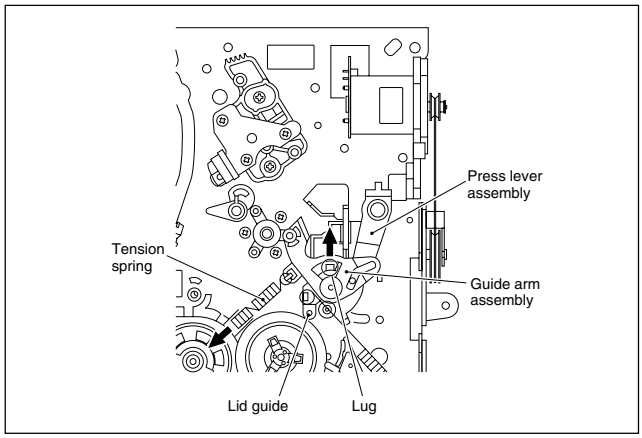

Fig. 2-2-5a

2.2.6 A/C head

1. How to remove

(1) Remove the two screws (A) and remove the A/C head together with the head base.
(2) When replacing only the A/C head, remove the three screws (B) while controlling the compression spring.

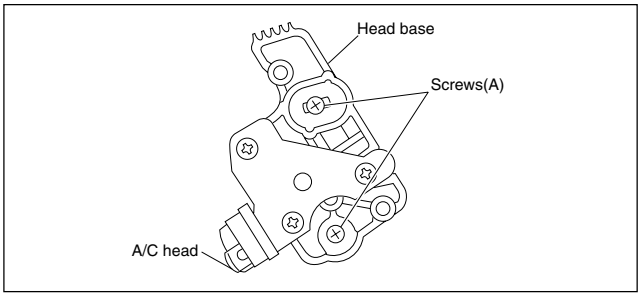

Fig. 2-2-6a

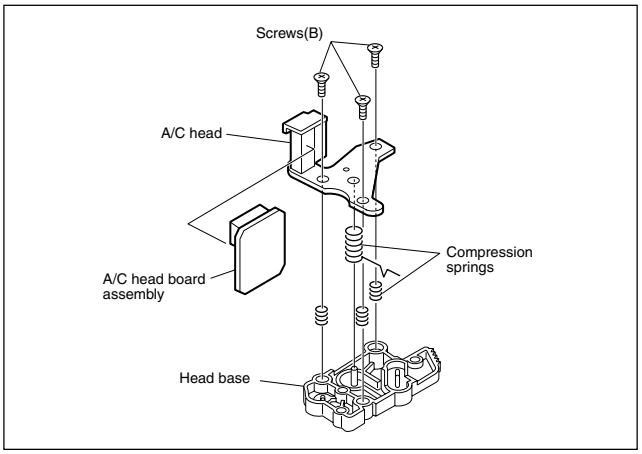

Fig. 2-2-6b

2. How to install

(1) To make the post-installation adjustment easier, set the temporary level as indicated in Fig.2-2-6c. Also make sure that the screw center (centre) is brought into alignment with the center (centre) position of the slot.

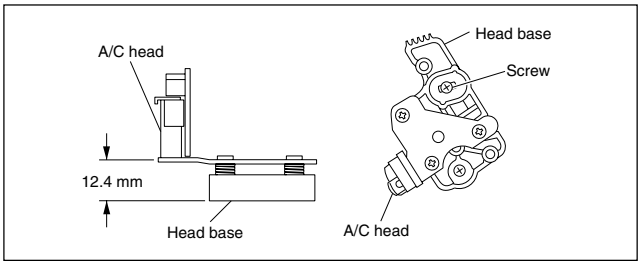

Fig. 2-2-6c

2.2.7 Loading motor

1. How to remove

(1) Remove the belt wound around the worm gear.
(2) Open the two lugs of the motor guide and remove the loading motor, loading motor board assembly and motor guide altogether by pulling them up.
(3) When replacing the loading motor board assembly, take care with the orientation of the loading motor. (Install so that the loading motor label faces upward.)
(4) When the motor pulley has been replaced, choose the fitting dimension as indicated in Fig.2-2-7a.

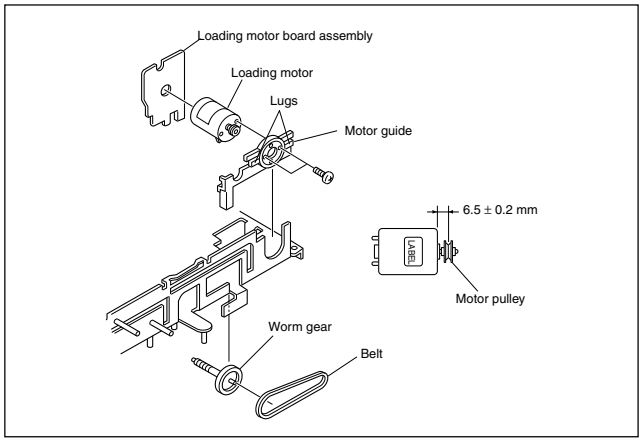

Fig. 2-2-7a

2.2.8 Capstan motor

1. How to remove

(1) Remove the belt (capstan) on the mechanism assembly back side.

(2) Remove the three screws (A) and remove the capstan motor.

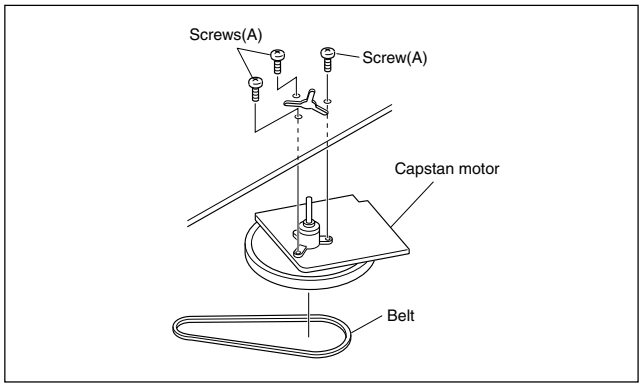

Fig. 2-2-8a

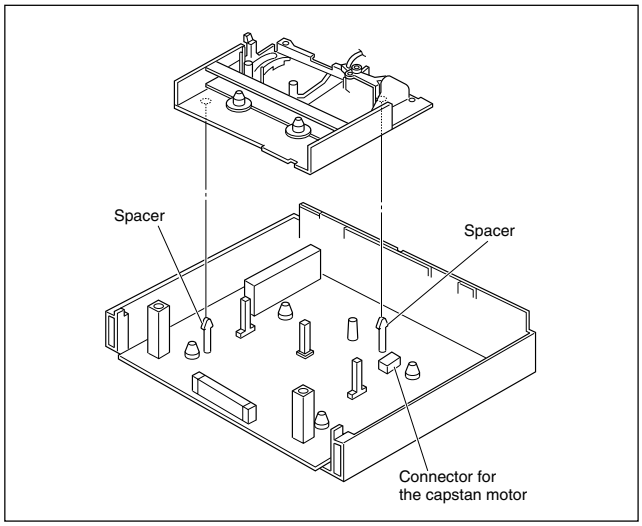

Fig. 2-2-8b

2. How to install (Centering the mounting position)

When the capstan motor has once been removed and then reinstalled out of the initial correct position in the rotational direction, the capstan motor current may be unstable during operation in high or low temperatures. This may result in greater Wow & Flutter and occasionally in power breakdown because of current over - load. Install the capstan motor while following the procedure given below.

(The capstan motor is centrally located when the unit is shipped from the factory.)

(1) Provisionally tighten the three screws (A) securing the capstan motor.

(2) Install the mechanism assembly to which the capstan motor is provisionally fastened on the bottom chassis which incorporates the Main board assembly. (No need to tighten the screws for mounting the mechanism.)
Make sure that all the connectors for the mechanism assembly and the Main board assembly are correctly installed as indicated in Fig. 2-2-8b.

(3) Making sure that the connector for the capstan motor is correctly mounted, and securely tighten the three screws (A).

Note:

- ***When the capstan motor has been replaced with a new one, perform recording in the EP(or LP) mode for at least 2 minutes at normal temperatures immediately before starting the FF/REW or SEARCH operations (Aging).***

2.2.9 Pole base assembly (supply or take-up side)

1. How to remove

(1) Remove the UV catcher 2 on the removal side by loosening the screw (A).

(2) Remove the pole base assembly on the supply side from the mechanism assembly by loosening the screw (B) on the mechanism assembly back side and sliding the pole base assembly toward the UV catcher 2.

(3) As for the pole base assembly on the take-up side, turn the pulley of the loading motor to lower the cassette holder because the screw (B) is hidden under the control plate. (See the “Procedures for Lowering the Cassette holder assembly” of 1.3 DISASSEMBLY/ASSEMBLY METHOD.) Further turn the motor pulley to move the cassette holder until the screw (B) is no longer under the control plate (in the half-loading position). Then remove it as done for the supply side by removing the screw (B).

Note:

- ***After reinstalling the Pole base assembly and the UV catcher2, be sure to perform compatibility adjustment.***

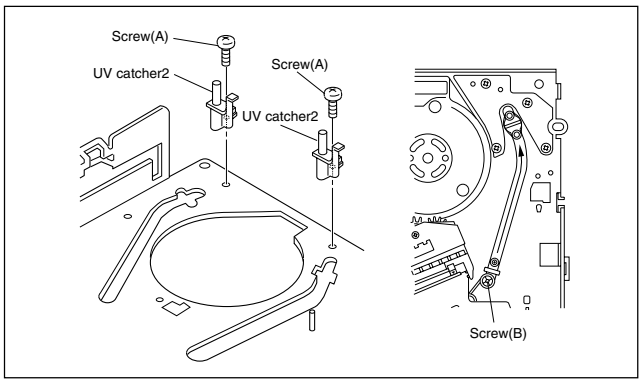

Fig. 2-2-9a

2.2.10 Rotary encoder

1. How to remove

(1) Remove the screw (A) and remove the rotary encoder by pulling it up. (See Fig. 2-2-10a.)

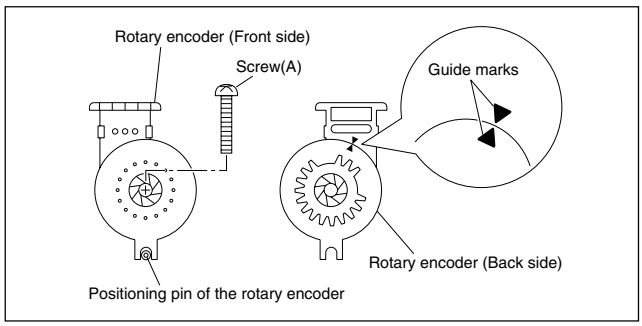

Fig. 2-2-10a

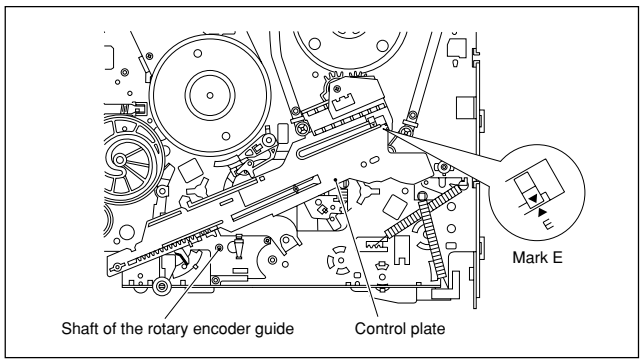

Fig. 2-2-10b

2. How to install (Phase matching)

(1) Make sure that the mark E of the control plate is in alignment with the mark ▼ of the loading arm gear shaft and bring the guide marks on the rotary encoder into alignment as indicated in Fig.2-2-10a. (See Fig. 2-2-10a and Fig. 2-2-10b.)

(2) Turn over the rotary encoder with its guide marks kept in alignment and install it by fitting on the shaft of the rotary encoder guide and the positioning pin.

(3) Tighten the screw (A) to complete the installation.

2.2.11 Clutch unit

(1) Remove the belt wound around the capstan motor and the clutch unit.

(2) Remove the slit washer and remove the clutch unit.

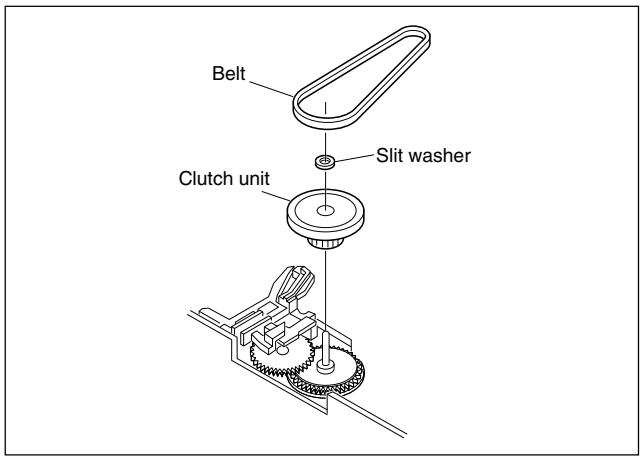

Fig. 2-2-11a

2.2.12 Change lever assembly, direct gear, clutch gear and coupling gear

1. How to remove

(1) Release the two lugs of the rotary encoder guide in the arrow-indicated direction and remove the change lever assembly.

(2) Remove the slit washer retaining the direct gear and remove the latter.
Take care so as not to lose the washer and spring. (See Fig.2-2-12a.)

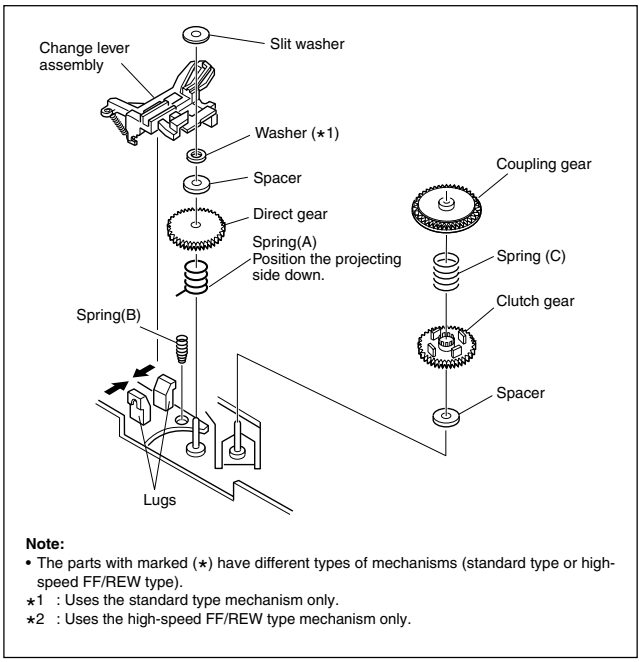

Fig. 2-2-12a

2. How to install

(1) Install the clutch gear, spring (A), spring (C), direct gear, spacer and others to the individual shafts of the main deck, and finally the slit washer. (See Fig.2-2-12a.)

(2) Let the spring (B) drops into the rotary encoder guide hole and install the change lever assembly.(Take care not to mistake a direction of the spring.) The point is to slightly lift the coupling gear and catch it from the both sides with the assembly. (See Fig.2-2-12b.)

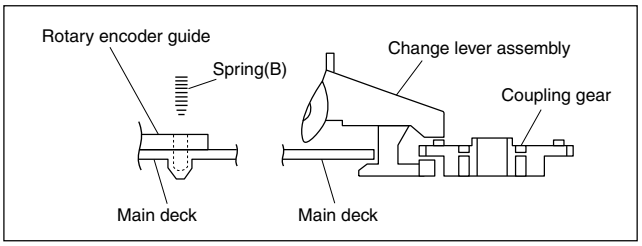

Fig. 2-2-12b

2.2.13 Link lever

1. How to remove

(1) Remove the two slit washers.
(2) Remove the link lever by lifting it from the shaft retained by the slit washers. Then swing the link lever counterclockwise and remove it from the locking section of the control plate.

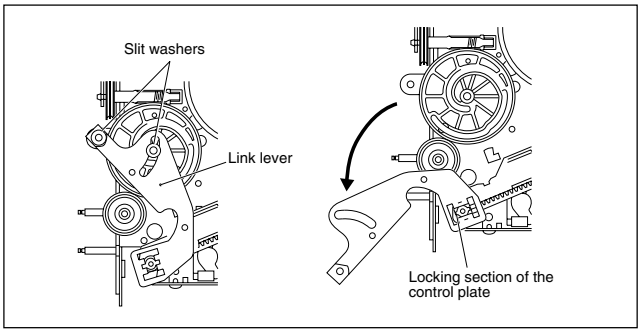

Fig. 2-2-13a

2. How to install (Phase matching)

(1) Slide the control plate so that its mark E is aligned with the mark ▼ on the loading arm gear shaft. (See Fig.2-2-13b.)
(2) Rotate the worm gear until the guide hole of the control cam is aligned exactly with the guide hole of the main deck. (See Fig.2-2-13c.)
(3) Insert the link lever into the locking section of the control plate. (See Fig.2-2-13a.)
(4) Rotate the link lever clockwise so that it is installed on the shafts in the center (centre) and on the left of the control cam.
(5) Fasten the slit washers at these two points.

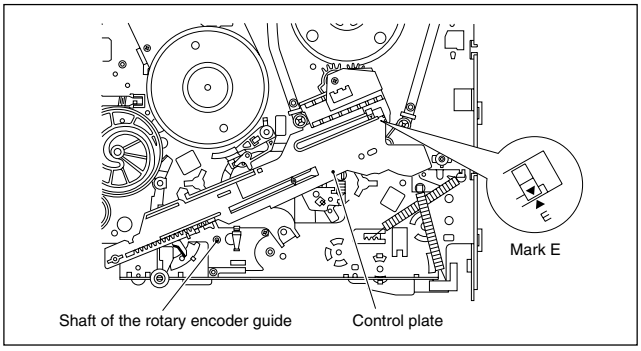

Fig. 2-2-13b

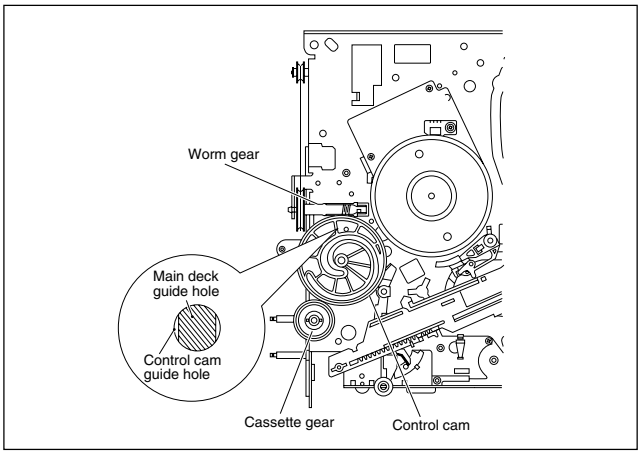

Fig. 2-2-13c

2.2.14 Cassette gear, control cam and worm gear

1. How to remove

(1) Remove the control cam by lifting it.
(2) Open the two lugs of the cassette gear outward and pull the latter off.
(3) Remove the belt wound around the worm gear and the loading motor.
(4) Open the lug of the lid guide outward and remove the worm gear.

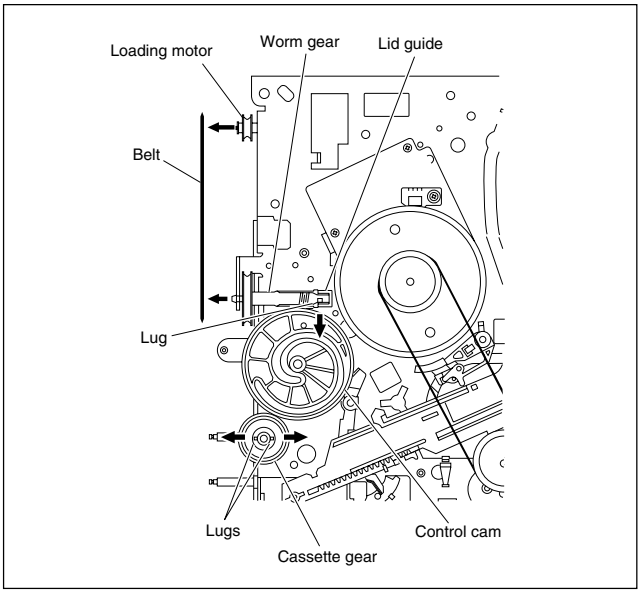

Fig. 2-2-14a

2.2.15 Control plate

1. How to remove

(1) Remove the screw (A) retaining the control bracket 1 and remove the latter.
(2) Slide the control plate as indicated by the arrow and remove the control plate. (See Fig.2-2-15a.)

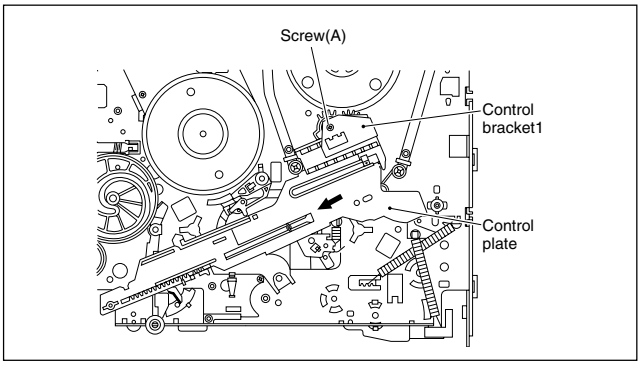

Fig. 2-2-15a

2. How to install (Phase matching)

(1) Adjust the position of the idler arm assembly pin as indicated in Fig.2-2-15b (to the left of center (centre) of the R section).
(2) Bring the guide hole of the take-up lever into alignment with the hole at the control plate guide and fix the position by inserting a 1.5 mm hexagonal wrench.

(3) Install the control plate so that the section A of the loading arm gear shaft fits into the hole (A) of the control plate, the section B of the control plate guide into the hole (B), and the control plate comes under the section C of the rotary encoder guide and the section D of the loading arm gear shaft while press-fit the pole base assmebly (supply side) as indicated by the arrow. It is important that the tension arm assembly shaft is positioned closer toward you than the control plate. (See Fig.2-2-15c.)
(4) Make sure that the mark E of the control plate is in alignment with the mark ▼ of the loading arm gear shaft. (See Fig.2-2-15c.)
(5) Pull off the hexagonal wrench for positioning.

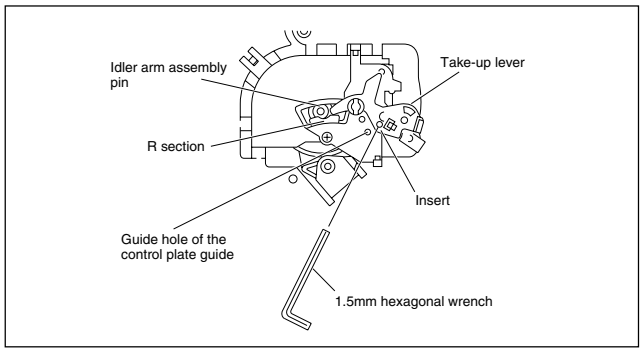

Fig. 2-2-15b

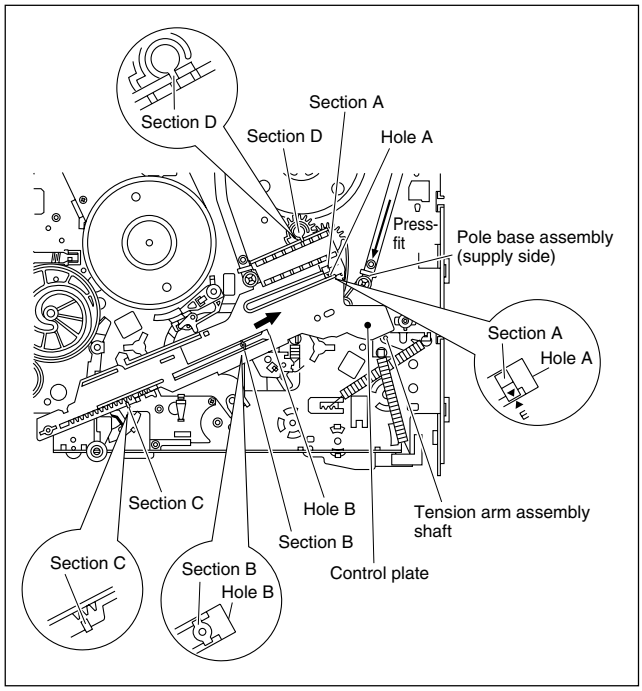

Fig. 2-2-15c

2.2.16 Loading arm gear (supply or take-up side) and loading arm gear shaft

1. How to remove

(1) Remove the loading arm gear (supply side) by loosening the screw (A). (See Fig. 2-2-16a.)
(2) Remove the screw (B) and remove the torsion arm from the pole base assembly (take-up side). (See Fig.2-2-16a.)
(3) Turn the loading arm gear (take-up side) clockwise so that the notch of the loading arm gear (take-up side) is in alignment with the projection of the loading arm gear shaft and lift it.
Likewise, turn the loading arm counterclockwise so that the notch is in alignment with the projection and remove the loading arm gear (take-up side). (See Fig.2-2-16a and Fig. 2-2-16b.)
(4) When removing the loading arm gear shaft, be sure of first removing the screw retaining the drum assembly (on the back side of the loading arm gear shaft). Then remove the screw (C) and remove the loading arm gear shaft by sliding it.

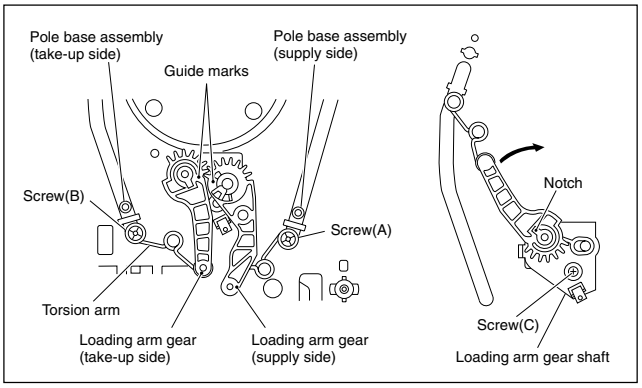

Fig. 2-2-16a

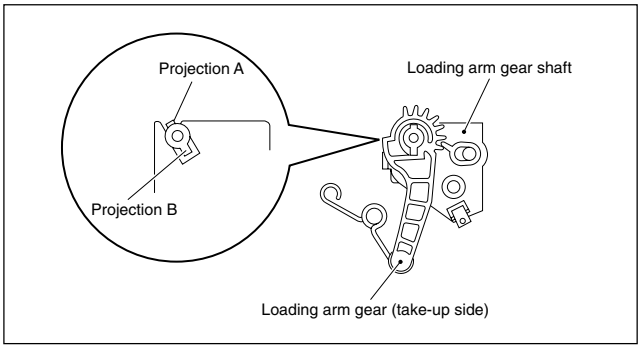

Fig. 2-2-16b

2. How to install

(1) Align the notch of the loading arm gear (take-up side) to the projection B of the loading arm gear shaft and slip it over. Then rotate it clockwise for alignment with the projection A and slip it down to the bottom. (See Fig.2-2-16b.)
(2) Then turn the loading arm gear (take-up side) counterclockwise. Hang the torsion arm on the pole base assembly (take-up side) and tighten the screw (B).
(3) Install the loading arm gear (supply side) so that the guide mark of the loading arm gear (take-up side) is in alignment with the guide mark of the loading arm gear (supply side). Then hang the torsion arm on the pole base assembly (supply side) and tighten the screw (A). (See Fig.2-2-16a.)

2.2.17 Take-up lever, take-up head and control plate guide

(1) Remove the spring of the take-up lever from the main deck.
(2) Remove the lug (A) of the take-up lever from the main deck and pull out the take-up lever and the take-up head together.
(3) Remove the screw (A).
(4) Align the idler arm assembly pin in the center (centre) of the R section of the control plate guide, remove the control plate guide lugs (B) and (C) from the main deck, and remove the control plate guide.

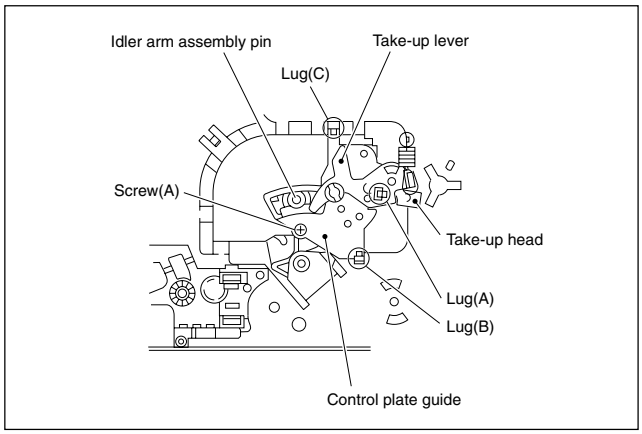

Fig. 2-2-17a

2.2.18 Capstan brake assembly

1. How to remove

(1) Move the lug (A) of the capstan brake assembly in the arrow-indicated direction so that it comes into alignment with the notch of the main deck. (See Fig. 2-2-18a.)
(2) Remove the lug (B) of the capstan brake assembly from the main deck and remove the capstan brake assembly.

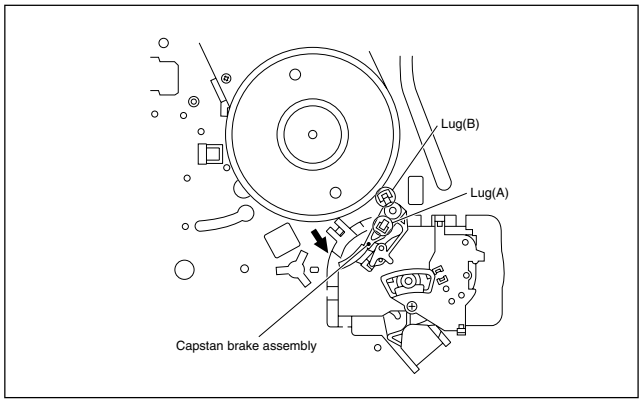

Fig. 2-2-18a

2.2.19 Sub brake assembly (take-up side)

1. How to remove

(1) Remove the spring attached to the lid guide and sub brake assembly (take-up side).
(2) Bring the lug (A) of the sub brake assembly (take-up side) into alignment with the notch of the main deck.
(3) Remove the lugs (B) and (C) of the sub brake assembly (take-up side) from the main deck and remove the sub brake assembly (take-up side).

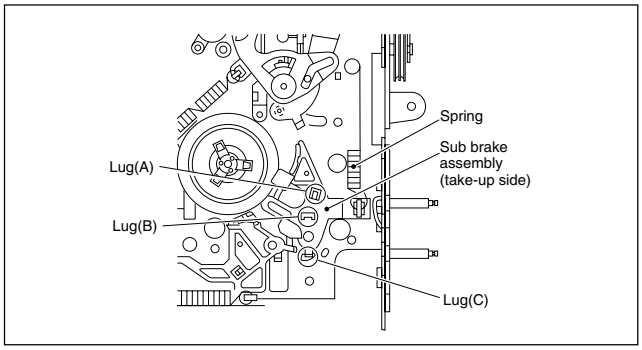

Fig. 2-2-19a

2.2.20 Main brake assembly (take-up side), reel disk (take-up side) and main brake assembly (supply side)

1. How to remove

(1) Move the main brake assembly (take-up side) in the arrow-indicated direction and remove the reel disk (take-up side).
(2) Remove the spring attached to the main brake assembly.
(3) Remove the lug (A) of the main brake assembly (take-up side) and pull out the lug (B) after bringing it into alignment with the main deck notch.
(4) Remove the lugs (C), (D) and (E) of the main brake assembly (supply side) from the main deck and pull them off. (See Fig.2-2-20a.)
(5) When installing the main brake assembly (take-up side), slide the brake lever in the direction as indicated by the arrow to prevent it from hitting the projection of the main brake assembly (take-up side). (See Fig.2-2-20b.)

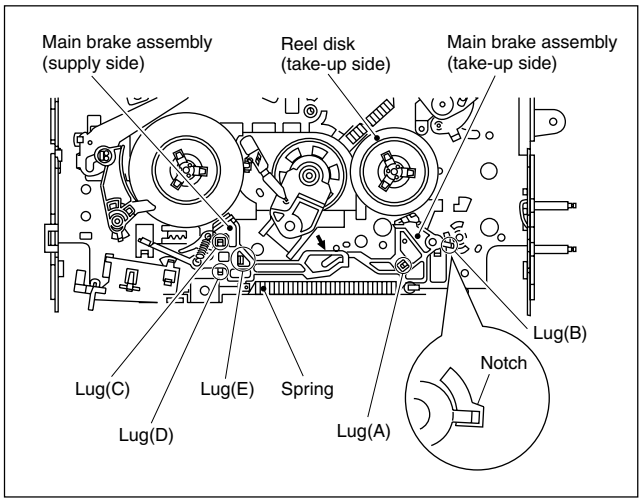

Fig. 2-2-20a

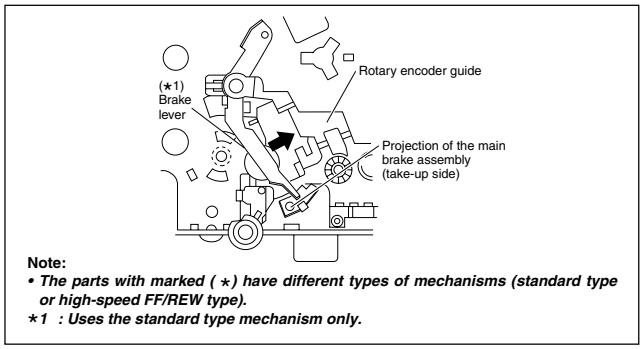

Fig. 2-2-20b

2.2.21 Tension brake assembly, reel disk (supply side) and tension arm assembly

1. How to remove

(1) Remove the three lugs of the tension brake assembly from the main deck and pull them off.
(2) Remove the reel disk (supply side) by loosening in the arrow-indicated direction the main brake assembly (supply side).
(3) Remove the tension spring on the back of the main deck. Then release the lug of the tension arm bearing in the arrow-indicated direction and draw out the tension arm assembly. (See Fig. 2-2-21a.)

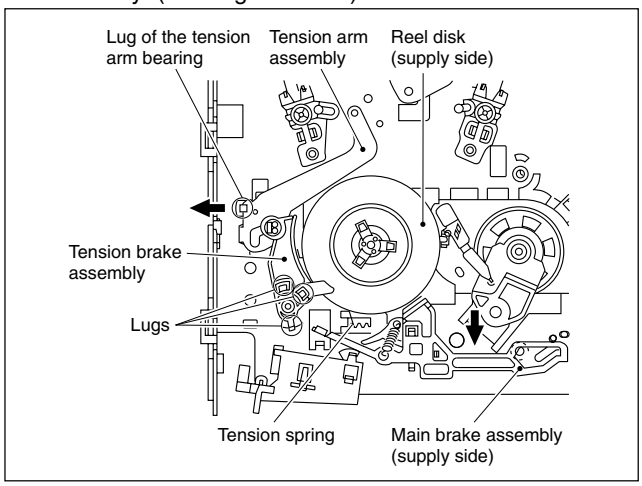

Fig. 2-2-21a

2.2.22 Idler lever, idler arm assembly

1. How to remove

(1) Remove the lug of the idler lever from the main deck and remove the hook fitted in the idler arm assembly hole by lifting it.
(2) Remove the slit washer and pull out the idler arm assembly.

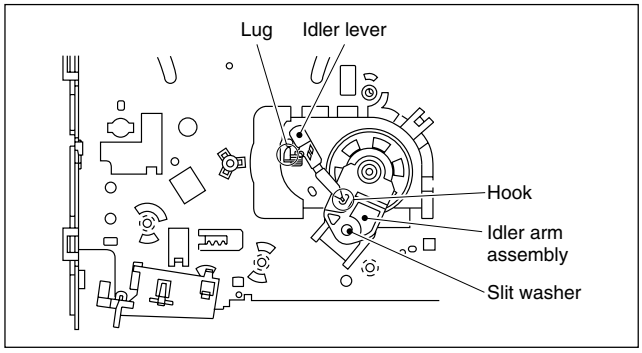

Fig. 2-2-22a

2.2.23 Stator assembly

(1) Remove the flat cable.
(2) Remove the two screws (A), (B) and remove the lug wire.
(3) Remove the stator assembly by lifting in the arrow-indicated direction. (Take care that the brush spring does not jump out.)

Notes:

- ***Be careful not to lose the brush and spring.***
- ***There are some models that do not use the lug wire. Refer to the parts list for these models.***
- ***When tightening the screw (B), place the caulked part of the lug terminal near to the shaft of the drum and then tighten it.***
- ***After installation, be sure to perform the switching point adjustment according to the electrical adjustment procedure.***

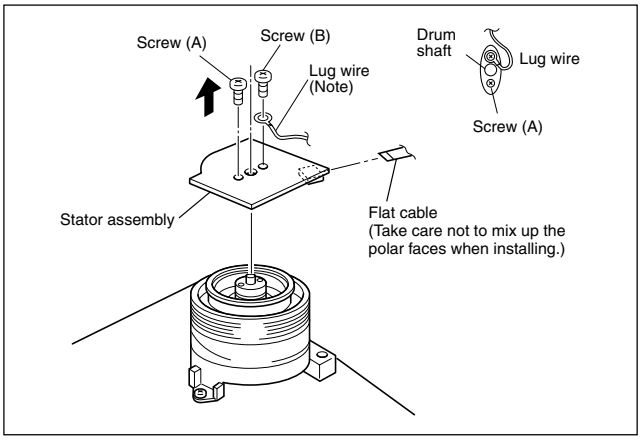

Fig. 2-2-23a

2.2.24 Rotor assembly

1. How to remove

(1) Remove the stator assembly.
(2) Remove the two screws (B) and remove the rotor assembly.

2. How to install

(1) Match the phases of the upper drum assembly and the rotor assembly as indicated in Fig.2-2-24a.
(2) Place the upper drum assembly hole (a) over the rotor assembly holes (b) (with three holes to be aligned) and tighten the two screws (B). (See Fig.2-2-24a.)

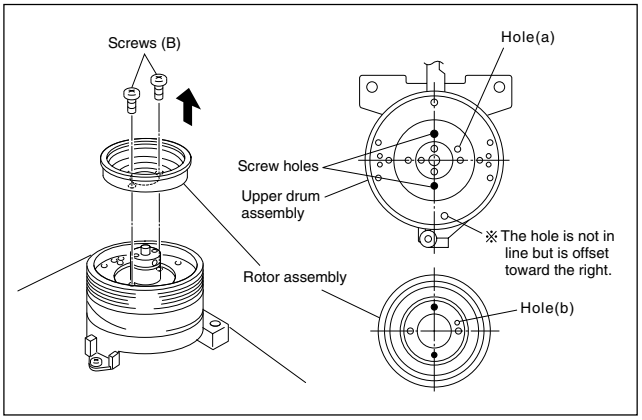

Fig. 2-2-24a

2.2.25 Upper drum assembly

Notes:

- ***To replace the upper drum assembly only may not be possible with some models. For upper drum assembly replacement, refer to the parts list. (When the parts number of the upper drum assembly is not listed on the parts list, then this cannot be replaced.)***
- ***When replacement is required, control the up- down movement of the brush. Never apply grease.***
- ***When replacing the upper drum assembly, replace it the together with the washer.***

1. How to remove

(1) Remove the stator assembly and rotor assembly.
(2) Loosen the screw of the collar assembly using a 1.5 mm hexagonal wrench and remove the collar assembly. Also remove the brush, spring and cap at one time.
(3) Remove the upper drum assembly and remove the washer using tweezers.

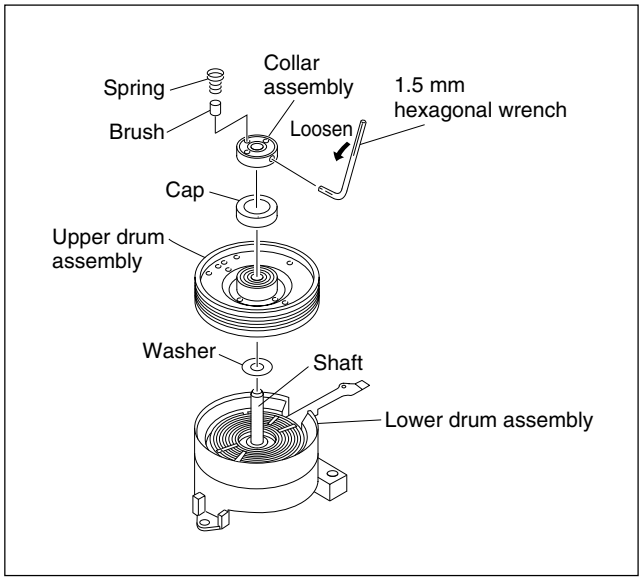

Fig. 2-2-25a

2. How to install

(1) Clean the coil parts of the lower drum assembly and the newly installed upper drum assembly with an air brush in advance. (See Fig.2-2-25b.)
(2) Install a new washer and upper drum assembly on the drum shaft. (See Fig.2-2-25a.)
(3) Install the cap to the upper drum assembly.
(4) Position the collar assembly as indicated in Fig.2-2-25c while controlling its up- down movement.
(5) Secure the collar assembly in position with a hexagonal wrench while pressing its top with the fingers.
(6) After installation, gently turn the upper drum assembly with your hand to make sure that it turns normally. Then install the brush and the spring.
(7) Install the rotor assembly and stator assembly according to Fig 2-2-23a and 2-2-24a.
(8) When installation is complete, clean the upper drum assembly and lower drum assembly and carry out the following adjustments.
   - PB switching point adjustment
   - Slow tracking adjustment
   - Compatibility adjustment (Be sure to check for compatibility for the EP (or LP) mode.)

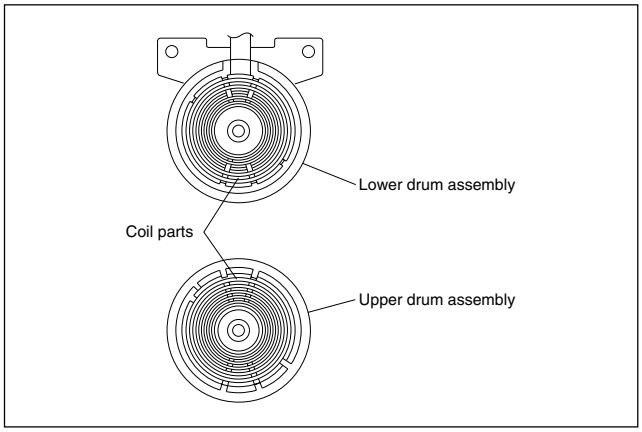

Fig. 2-2-25b

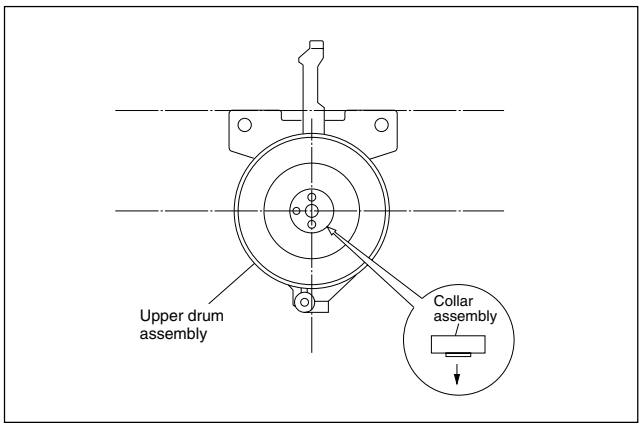

Fig. 2-2-25c

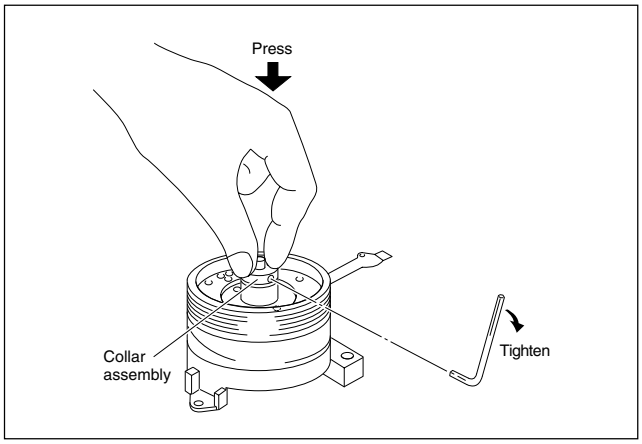

Fig. 2-2-25d

2.3 Compatibility adjustment

Notes:

- ***Although compatibility adjustment is very important, it is not necessary to perform this as part of the normal servicing work. It will be required when you have replaced the A/C head, drum assembly or any part of the tape transport system.***
- ***To avoid any damage to the alignment tape while performing the compatibility adjustment, get a separate cassette tape (for recording and play back) ready to be used for checking the initial tape running behavior.***
- ***Unless otherwise specified, all measuring points and adjustment parts are located on the Main board.***
- ***When using the Jig RCU, it is required to set the VCR to the Jig RCU mode (the mode in which codes from the Jig RCU can be received). (See SECTION 1 DISASSEMBLY.)***

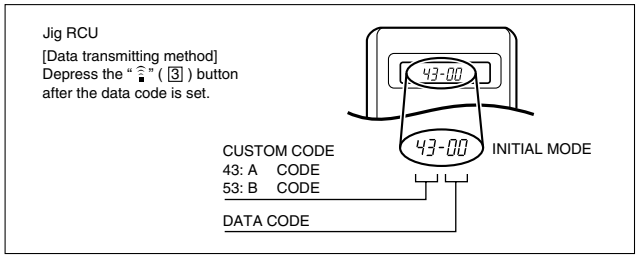

Fig. 2-3a Jig RCU [PTU94023B]

2.3.1 FM waveform linearity

Signal	(A1) (A2)	• Alignment tape(SP, stairstep, NTSC) [MHP] • Alignment tape(EP, stairstep, NTSC) [MHP-L]
Mode	(B)	• PB
Equipment	(C)	• Oscilloscope
Measuring point	(D)	• TP106 (PB. FM)
External trigger	(E)	• TP111 (D.FF)
Adjustment part	(F)	• Guide roller [Mechanism assembly]
Specified value	(G)	• Flat V.PB FM waveform
Adjustment tool	(H)	• Roller driver [PTU94002]

(1) Play back the alignment tape (A1).
(2) Apply the external trigger signal to D.FF (E), to observe the V.PB FM waveform at the measuring point (D).
(3) Set the VCR to the manual tracking mode.
(4) Make sure that there is no significant level drop of the V.PB FM waveform caused by the tracking operation, with its generally parallel and linear variation ensured. Perform the following adjustments when required. (See Fig. 2-3-1a.)
(5) Reduce the V.PB FM waveform by the tracking operation. If a drop in level is found on the left side, turn the guide roller of the pole base assembly (supply side) with the roller driver to make the V.PB FM waveform linear.
If a drop in level is on the right side, likewise turn the guide roller of the pole base assembly (take-up side) with the roller driver to make it linear. (See Fig. 2-3-1c.)
(6) Make sure that the V.PB FM waveform varies in parallel and linearly with the tracking operation again. When required, perform fine-adjustment of the guide roller of the pole base assembly (supply or take-up side).
(7) Unload the cassette tape once, play back the alignment tape (A1) again and confirm the V.PB FM waveform.
(8) After adjustment, confirm that the tape wrinkling does not occur at the roller upper or lower limits. (See Fig. 2-3-1d.)

[Perform adjustment step (9) only for the models equipped with SP mode and EP (or LP) mode.]

(9) Repeat steps (1) to (8) by using the alignment tape (A2).

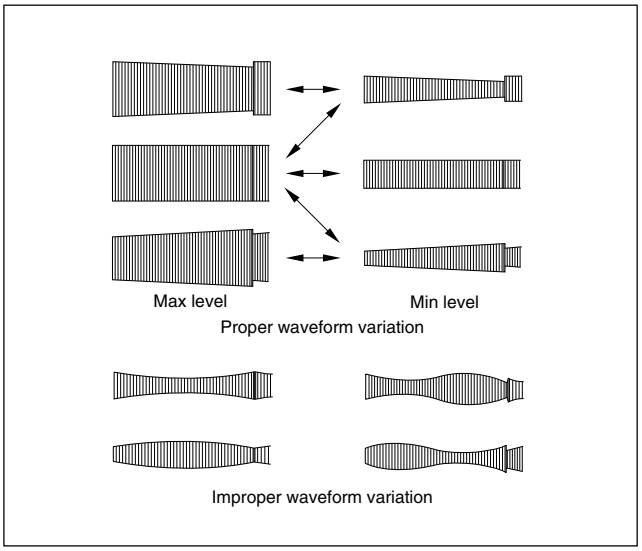

Fig. 2-3-1a

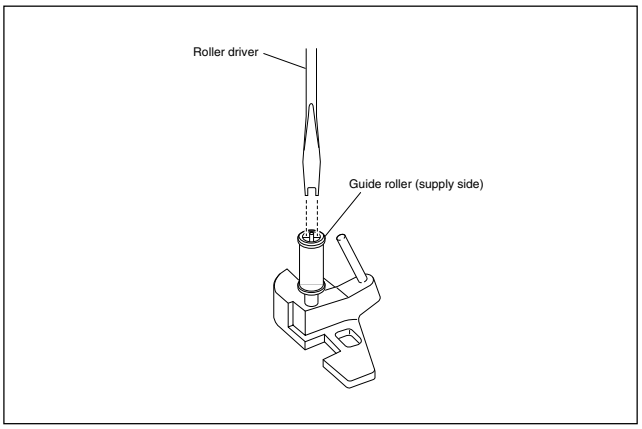

Fig. 2-3-1b

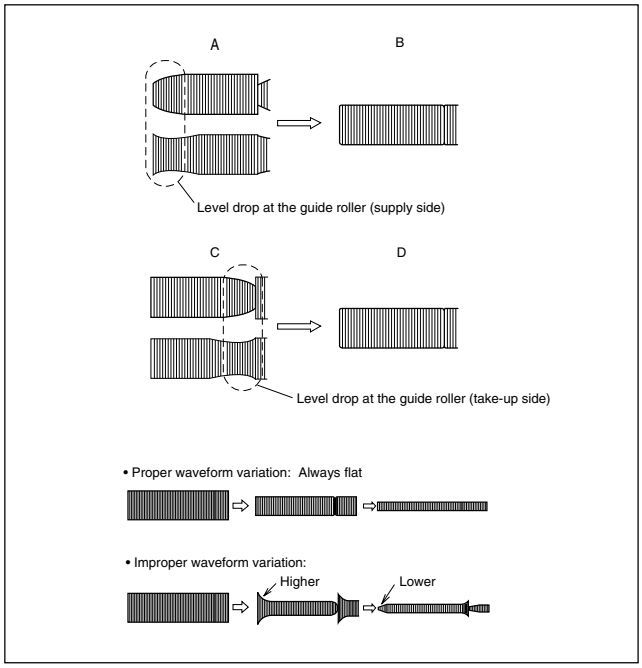

Fig. 2-3-1c

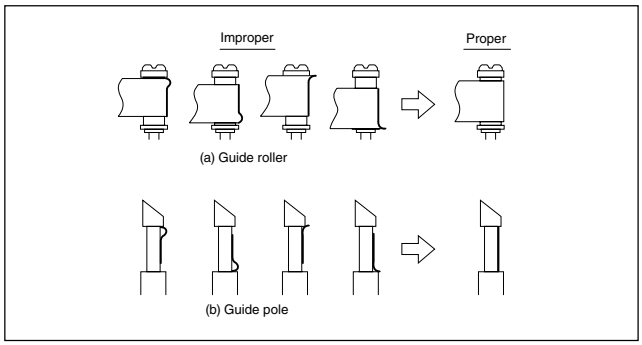

Fig. 2-3-1d

2.3.2 Height and tilt of the A/C head

Note:

- ***Set a temporary level of the height of the A/C head in advance to make the adjustment easier after the A/C head has been replaced. (See Fig.2-2-6c.)***

Signal	(A)	• Alignment tape(SP, stairstep, NTSC) [MHP]
Mode	(B)	• PB
Equipment	(C)	• Oscilloscope
Measuring point	(D1) (D2)	• AUDIO OUT terminal • TP4001 (CTL. P)
External trigger	(E)	• TP111 (D.FF)
Adjustment part	(F)	• A/C head [Mechanism assembly]
Specified value	(G)	• Maximum waveform

(1) Play back the alignment tape (A).
(2) Apply the external trigger signal to D.FF (E), to observe the AUDIO OUT waveform and Control pulse waveform at the measuring points (D1) and (D2) in the ALT mode.
(3) Set the VCR to the manual tracking mode.
(4) Adjust the AUDIO OUT waveform and Control pulse waveform by turning the screws (1), (2) and (3) little by little until both waveforms reach maximum. The screw (1) and (3) are for adjustment of tilt and the screw (2) for azimuth.

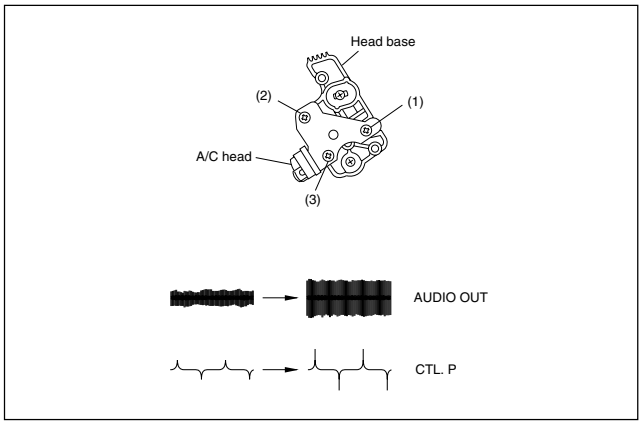

Fig. 2-3-2a

2.3.3 A/C head phase (X-value)

Signal	(A1)	• Alignment tape(SP, stairstep, NTSC) [MHP]
Mode	(B)	• PB
Equipment	(C)	• Oscilloscope
Measuring point	(D)	• TP106 (PB. FM)
External trigger	(E)	• TP111 (D.FF)
Adjustment part	(F)	• A/C head base [Mechanism assembly]
Specified value	(G)	• Maximum V.PB FM waveform
Adjustment tool	(H)	• A/C head positioning tool [PTU94010]

(1) Play back the alignment tape (A1).
(2) Apply the external trigger signal to D.FF (E), to observe the V.PB FM waveform at the measuring point (D).
(3) Set the VCR to the manual tracking mode.
(4) Loosen the screws (4) and (5), then set the A/C head positioning tool to the innermost projected part of the A/C head. (See Fig. 2-3-3a.)
(5) Turn the A/C head positioning tool fully toward the capstan. Then turn it back gradually toward the drum and stop on the second peak point position of the V.PB FM waveform output level. Then tighten the screws (4) and (5).
(6) Perform the tracking operation and make sure that the V.PB FM waveform is at its maximum.
If it is not at maximum, loosen the screws (4) and (5), and turn the A/C head positioning tool to bring the A/C head to a position, around where the waveform reaches its maximum for the first time. Then tighten the screws (4) and (5).

[Perform adjustment steps (7) to (10) only for 2 Head models equipped with LP mode.]

(7) Then play back the alignment tape (A2).
(8) Set the VCR to the manual tracking mode.
(9) Perform the tracking operation and make sure that the V.PB FM waveform is at its maximum.
(10) If it is not at maximum, loosen the screws (4) and (5), and turn the A/C head positioning tool to bring the A/C head to a position, around where the waveform reaches its maximum for the first time. Then tighten the screws (4) and (5).

Note:

- ***After adjusting, always perform the confirmation and re-adjustment of the item 2.3.4.***

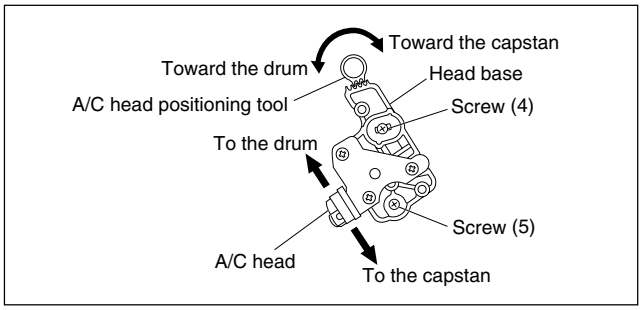

Fig. 2-3-3a

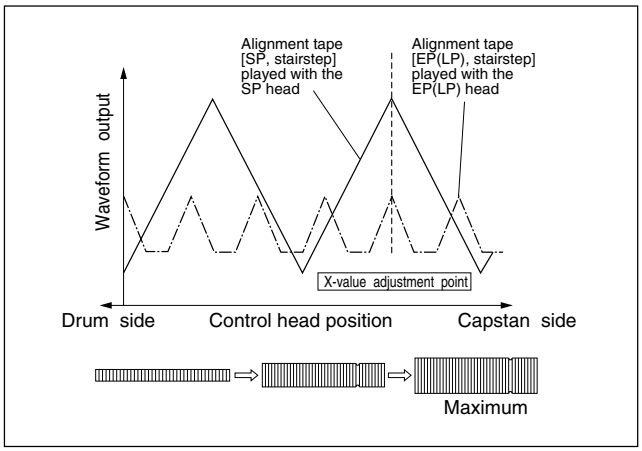

Fig. 2-3-3b

2.3.4 Standard tracking preset

Signal	(A)	• Alignment tape(EP, stairstep, NTSC) [MHP-L]
Mode	(B)	• PB → Auto adjust
Equipment	(C)	• Oscilloscope
Measuring point	(D)	• TP106 (PB. FM)
External trigger	(E)	• TP111 (D.FF)
Adjustment part	(F)	• Jig RCU: Code “50”
Specified value	(G)	• STOP mode (Maximum V.PB FM waveform)
Adjustment tool	(H)	• Jig RCU [PTU94023B]

(1) Play back the alignment tape (A).
(2) Apply the external trigger signal to D.FF (E), to observe the V.PB FM waveform at the measuring point (D).
(3) Confirm that the automatic tracking operation is completed.
(4) Set the VCR to the Auto adjust mode by transmitting the code (F) twice from the Jig RCU. When the VCR enters the stop mode, the adjustment is completed.
(5) If the VCR enters the eject mode, perform adjustment for the audio control head phase (X-value) again.

2.3.5 Tension pole position

Signal	(A)	• Back tension cassette gauge [PUJ48076-2]
Mode	(B)	• PB
Adjustment part	(F)	• Adjust pin [Mechansim assembly]
Specified value	(G)	• 25 - 51 gf•cm (2.45 – 5 × 10^{-3} Nm]

(1) Play back the back tension cassette gauge (A).
(2) Check that the indicated value on the left side gauge is within the specified value (G).
(3) If the indicated value is not within the specified value (G), perform the adjustment in a following procedure.
  1) Set the VCR to the mechanism service mode. (See SECTION 1 DISASSEMBLY.)
  2) Set the VCR to the play back mode and adjust by turning adjustment pin to align the tension arm assembly edge with the main deck hole (A) on the right edge marker. (See Fig. 2-3-5a)

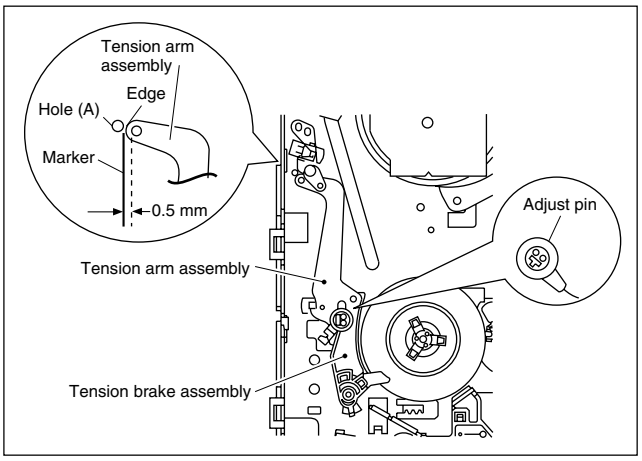

Fig. 2-3-5a

Mechanism Timing Chart

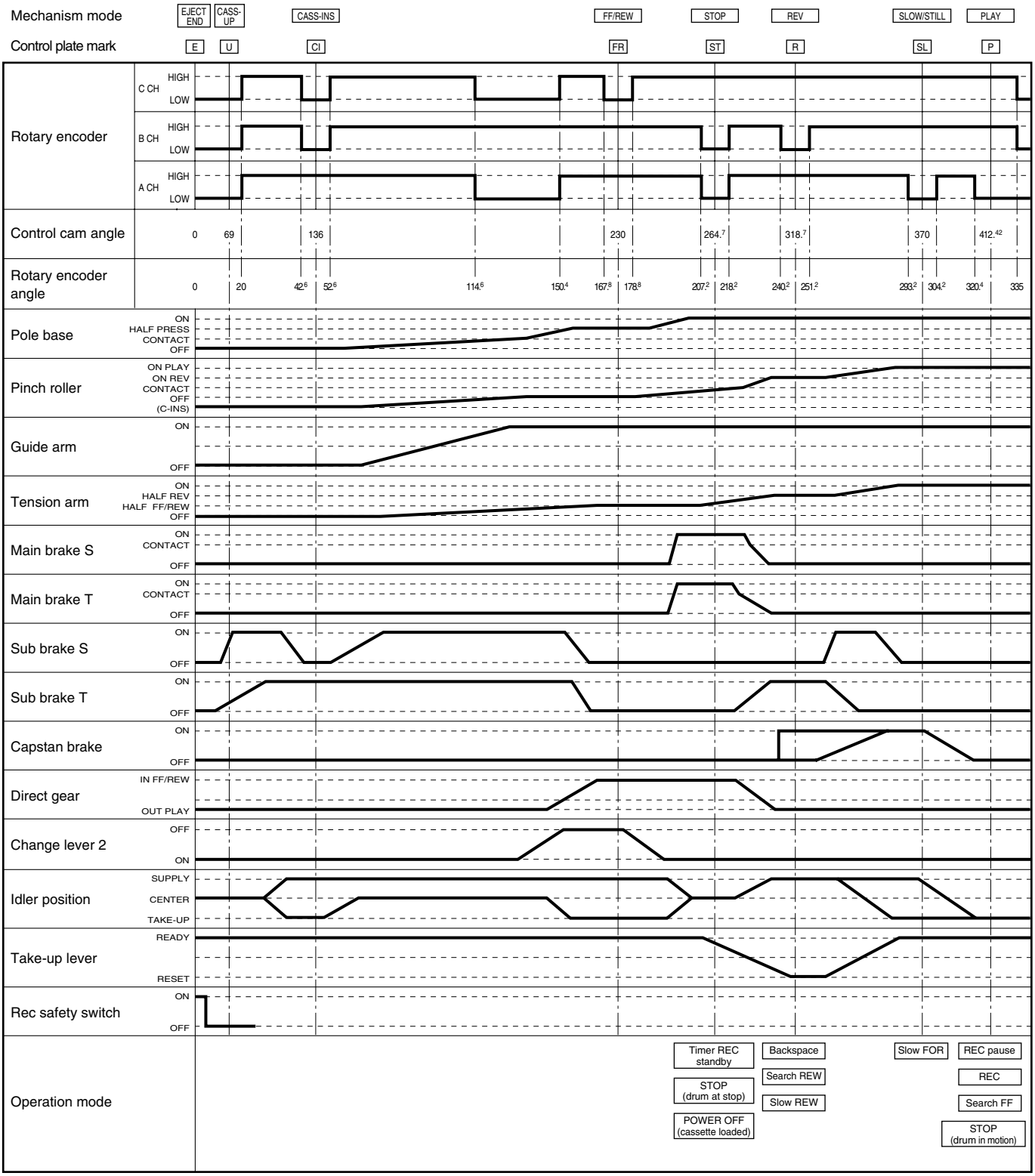

SECTION 3
ELECTRICAL ADJUSTMENT

3.1 Precaution

The following adjustment procedures are not only necessary after replacement of consumable mechanical parts or board assemblies, but are also provided as references to be referred to when servicing the electrical circuitry.
In case of trouble with the electrical circuitry, always begin a service by identifying the defective points by using the measuring instruments as described in the following electrical adjustment procedures. After this, proceed to the repair, replacement and/or adjustment. If the required measuring instruments are not available in the field, do not change the adjustment parts (variable resistor, etc.) carelessly.

3.1.1 Required test equipments

- Color (colour) television or monitor
- Oscilloscope: wide-band, dual-trace, triggered delayed sweep
- Frequency counter
- Audio level meter
- Signal generator: RF / IF sweep / marker
- Signal generator: stairstep, color (colour) bar [NTSC]
- Recording tape
- Digit-key remote controller (provided)

3.1.2 Required adjustment tools

Jig RCU PTU94023B	Alignment tape (SP, stairstep, NTSC) MHP	Alignment tape (EP, stairstep, NTSC) MHP-L
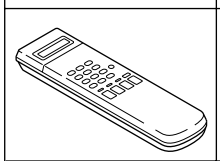	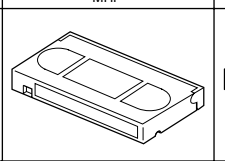	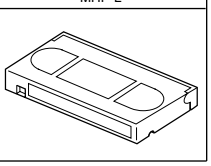
LPF PTU93006	Alignment tape (S-VHS, SP/EP, color (colour) bar) MH-1H	
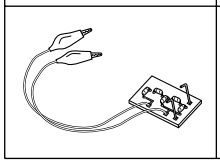	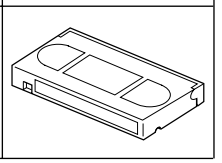	

3.1.3 Color (colour) bar signal,Color (colour) bar pattern

● **Color bar signal [NTSC]**

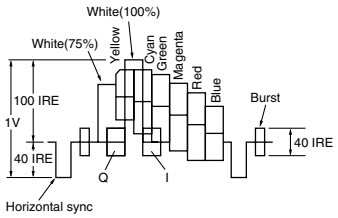

● **Color bar pattern [NTSC]**

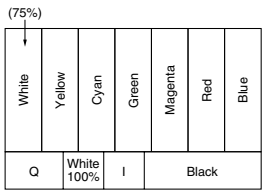

3.1.4 Switch settings and standard precautions

The SW settings of the VCR and the standard precautions for the electrical adjustments are as follows.

- ***When using the Jig RCU, it is required to set the VCR to the Jig RCU mode (the mode in which codes from the Jig RCU can be received). (See SECTION 1 DISASSEMBLY.)***

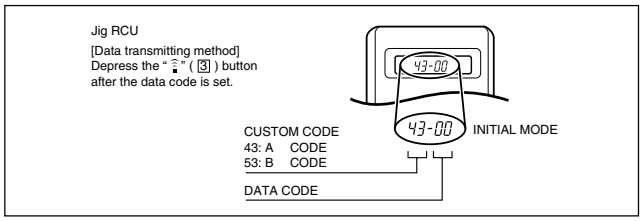

Fig. 3-1-4a Jig RCU [PTU94023B]

- ***Set the switches as shown below unless otherwise specified on the relevant adjustment chart. The switches that are not listed below can be set as desired.***
  If the VCR is not equipped with the functions detailed below, setup is not required.

AUTO PICTURE/VIDEO CALIBRATION/ B.E.S.T./D.S.P.C.	OFF
PICTURE CONTROL/SMART PICTURE	NORMAL/NATURAL
VIDEO STABILIZER	OFF
TBC	ON
Digital 3R	ON
VIDEO NAVIGATION/TAPE MANAGER	OFF

- ***If there is a reference to a signal input methed in the signal column of the adjustment chart, "Ext. S-input" means the Y/C separated video signal and "Ext. input" means the composite video signal input.***
- ***Unless otherwise specified, all measuring points and adjustment parts are located on the Main board.***

3.1.5 EVR Adjustment

Some of the electrical adjustments require the adjustment performed by the EVR system. The main unit have EEPROMs for storing the EVR adjustment data and user setups.

Notes:

- ***In the EVR adjustment mode, the value is varied with the channel buttons (+, –). The adjusted data is stored when the setting mode changes (from PB to STOP, when the tape speed is changed, etc.). Take care to identify the current mode of each adjustment item when making an adjustment.***
- ***When changing the address setting in the EVR adjustment mode, use the Jig RCU or the remote controller having numeric keypad with which a numeric code can be directly input.***
  The remote control code of the Jig RCU corresponds to each of the digit keys on the remote controller as follows.

Digit-key	0	1	2	3	4	5	6	7	8	9
Code	20	21	22	23	24	25	26	27	28	29

- ***As the counter indication and remaining tape indication are not displayed FDP during the EVR adjustment mode, check them on the TV monitor screen.***
- ***When performing the EVR adjustment, confirm that the FDP indication is changed to the EVR mode, as shown below.***

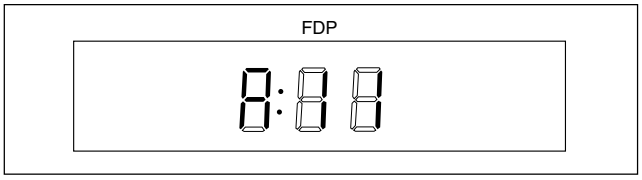

Fig. 3-1-5a EVR mode

3.2 Servo circuit

3.2.1 Switching point

Signal	(A1) (A2)	• Stairstep signal • Alignment tape (SP,stairstep,NTSC) [MHP]
Mode	(B)	• PB
Equipment	(C)	• Oscilloscope
Measuring point	(D1) (D2)	• VIDEO OUT terminal (75Ω terminated) • TP106 (PB. FM)
External trigger	(E)	• TP111 (D.FF)/slope : –
Adjustment part	(F)	• Jig code “5A”
Specified value	(G)	• 7.5 ± 0.5H
Adjustment tool	(H)	• Jig RCU [PTU94023B]

(1) Play back the signal (A1) of the alignment tape (A2).
(2) Apply the external trigger signal to D.FF (E) to observe the VIDEO OUT waveform and V.PB FM waveform at the measuring points (D1) and (D2).
(3) Set the VCR to the manual tracking mode.
(4) Adjust tracking so that the V.PB FM waveform becomes maximum.
(5) Set the VCR to the Auto adjust mode by transmitting the code (F) from the Jig RCU. When the VCR enters the stop mode, the adjustment is completed.
(6) If the VCR enters the eject mode, repeat steps (1) to (5) again.
(7) Play back the alignment tape (A2) again, confirm that the switching point is the specified value (G).

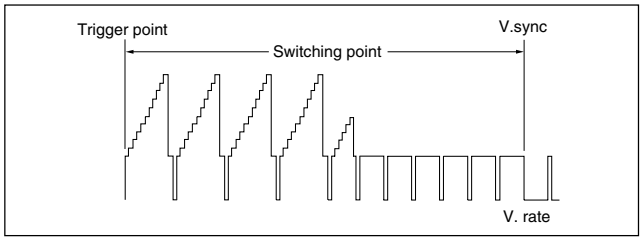

Fig. 3-2-1a Switching point

3.2.2 Slow tracking preset

Signal	(A1) (A2)	• Ext. input • Color (colour) bar signal [NTSC]
Mode	(B1) (B2)	• VHS SP • VHS EP
Measuring point	(D)	• TV-Monitor
Adjustment part	(F)	• Jig code “71“ or “72”
Specified value	(G)	• Minimum noise
Adjustment tool	(H)	• Jig RCU [PTU94023B]

(1) Record the signal (A2) in the mode (B1), and play back the recorded signal.
(2) Set the VCR to the manual tracking mode.
(3) Set the VCR to the FWD slow (+1/6x) mode.
(4) Transmit the code (F) from the Jig RCU to adjust so that the noise bar becomes the specified value (G) on the TV monitor in the slow mode.
(5) Set the VCR to the Stop mode.
(6) Confirm that the noise bar is (G) on the TV monitor in the slow mode.
(7) Repeat steps (3) to (6) in the REV slow (–1/6x) mode.
(8) Repeat steps (1) to (7) in the mode (B2).

Note:
- ***For FWD slow (+1/6x) playback, transmit the code “08” from the Jig RCU to enter the slow playback mode, and transmit the code “D0” for REV slow (–1/6x) mode.***

3.3 Video circuit

3.3.1 D/A level

Signal	(A1) (A2) (A3)	• Ext. S-input / Ext. input • Color (colour) bar signal [NTSC] • S-VHS tape
Mode	(B)	• S-VHS • EE
Equipment	(C)	• Oscilloscope
Measuring point	(D)	• VIDEO OUT terminal (75Ω terminated)
Adjustment part	(F)	• VR1201 (D/A LEVEL ADJ) [2D DIGITAL board]
Specified value (Note)	(G)	• 1.00 ± 0.015 Vp-p (reference value)

(1) Insert the cassette tape (A3) to enter the mode (B).
(2) Observe the VIDEO OUT waveform at the measuring point (D).
(3) Check the Y level value when the External S-input (Y/C separated video signal).
(4) Switch the input signal to the External input (composite video signal), and adjust the adjustment part (F) so that the Y level becomes the same value observed in step (3).

Note:
- ***The specified value (G) is just a reference value to be obtained when the External S-Video (Y/C separated video) signal is input. In actual adjustment, set it to the value observed in step (3).***

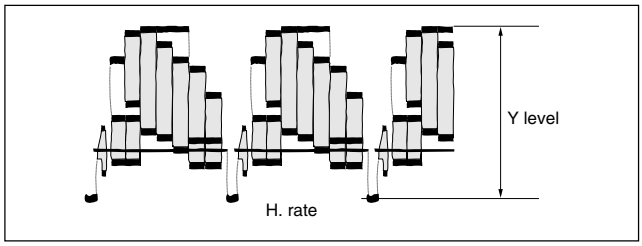

Fig. 3-3-1a D/A level

3.3.2 EE Y/PB Y (S-VHS/VHS) level

Signal	(A1) (A2)	• Ext. input • Color (colour) bar signal [NTSC]
Mode	(B1) (B2) (B3)	• EE • S-VHS SP • VHS SP
Equipment	(C)	• Oscilloscope
Measuring point	(D)	• Y OUT terminal (75Ω terminated)
EVR mode EVR address	(F1) (F2) (F3) (F4)	• Jig code “57” • A : 11 • Jig code “21” • Jig code “18” or “19” (Channel +/-)
Specified value	(G)	• 1.00 ± 0.05 Vp-p
Adjustment tool	(H)	• Jig RCU [PTU94023B]

(1) Observe the Y OUT waveform at the measuring point (D).
(2) Set the VCR to the EVR mode by transmitting the code (F1) from the Jig RCU.

(3) Set the EVR address to (F2) by transmitting the code (F3) from the Jig RCU.
(4) Transmit the code (F4) from the Jig RCU to adjust so that the Y level of the Y OUT waveform becomes the specified value (G).
(5) Release the EVR mode of the VCR by transmitting the code (F1) from the Jig RCU again. (When the EVR mode is released, the adjusted data is memorized.)
(6) Record the signal (A2) in the mode (B2), and play back the recorded signal.
(7) Set the VCR to the manual tracking mode.
(8) Repeat steps (1) to (5) in the mode (B2).
(9) Record the signal (A2) in the mode (B3), and play back the recorded signal.
(10) Set the VCR to the manual tracking mode.
(11) Repeat steps (1) to (5) in the mode (B3).

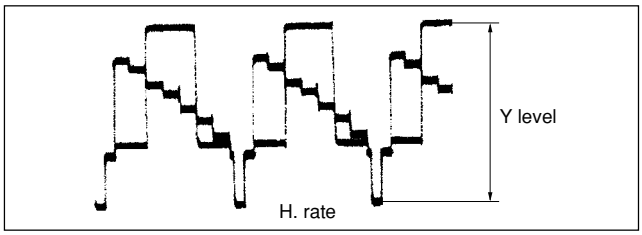

Fig. 3-3-2a EE/PB Y level

3.3.3 REC color (colour) level

Signal	(A1) (A2) (A3)	• Alignment tape(S-VHS, SP/EP, Color(colour) bar) [MH-1H] • Ext. input • Color (colour) bar signal [NTSC]
Mode	(B1) (B2)	• S-VHS SP • S-VHS EP
Equipment	(C)	• Oscilloscope
Measuring point	(D1) (D2)	• TP106 (PB. FM) • PB color (colour) output of the LPF
External trigger	(E)	• TP111 (D.FF)
EVR mode EVR address	(F1) (F2) (F3) (F4)	• Jig code “57” • A : 02 • Jig code “20” and “22” • Jig code “18” or “19” (Channel +/-)
Specified value	(G)	• SP: “B” x 125 ± 5% • EP: “B” x 125 ± 5%
Adjustment tool	(H1) (H2)	• Jig RCU [PTU94023B] • LPF [PTU93006] (See Fig. 3-3-3a.)

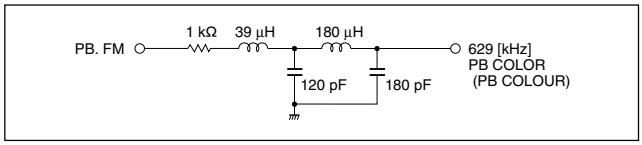

Fig. 3-3-3a LPF

(1) Connect the adjustment tool (H2) to the measuring point (D1).
(2) Apply the external trigger signal to D.FF (E) to observe the PB color (colour) waveform at the measuring point (D2).
(3) Play back the signal (A3) in the mode (B1) of the alignment tape (A1).
(4) Set the VCR to the manual tracking mode.
(5) Adjust tracking so that the PB color (colour) waveform becomes maximum. Make a note of the higher PB color (colour) level as “B” at this time.
(6) Record the signal (A3) in the mode (B1), and play back the recorded signal.
(7) Set the VCR to the EVR mode by transmitting the code (F1) from the Jig RCU.
(8) Set the EVR address to (F2) by transmitting the code (F3) from the Jig RCU.
(9) Transmit the code (F4) from the Jig RCU to adjust so that the higher level channel becomes the specified value (G) of the note "B" level as shown in Fig. 3-3-3b. (Adjust before recording, then confirm it by playing back.)
(10) After adjustment, record the signal (A3) then playing it back again. At this time, confirm that there is no inverting phenomenon or noise appearing on the playback screen.
(11) Release the EVR mode of the VCR by transmitting the code (F1) from the Jig RCU again. (When the EVR mode is released, the adjusted data is memorized.)
(12) Repeat steps (3) to (11) in the mode (B2).

Note:

- ***After adjusting, always perform the confirmation and re-adjustment of the item 3.4.1.***

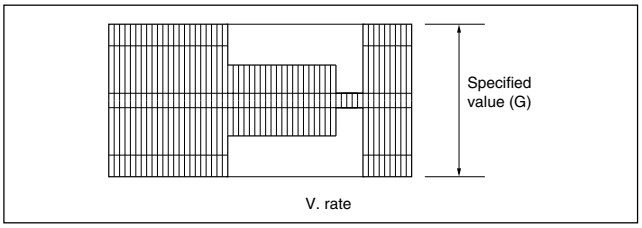

Fig. 3-3-3b REC color (colour) level

3.3.4 Video EQ (Frequency response)

Signal	(A1) (A2)	• Ext. S-input • Video sweep signal
Mode	(B1) (B2) (B3)	• S-VHS SP • S-VHS EP • Picture Control / Smart Picture REC : Normal / Natural PB : Edit / Distinct
Equipment	(C)	• Oscilloscope
Measuring point Frequency marker	(D1) (D2)	• Y OUT terminal (75Ω terminated) • 3 [MHz]
External trigger	(E)	• TP111 (D.FF)
EVR mode EVR address	(F1) (F2) (F3) (F4)	• Jig code “57” • A : 03 • Jig code “20” and “23” • Jig code “18” or “19” (Channel +/-)
Specified value	(G)	• SP: 2.8 ± 0.3 div. (–3 ± 1 dB) • EP: 2.8 ± 0.3 div. (–3 ± 1 dB)
Adjustment tool	(H)	• Jig RCU [PTU94023B]

(1) Apply the external trigger signal to D.FF (E) to observe the Y OUT waveform at the measuring point (D1).
(2) Record the signal (A2) in the mode (B1), and play back the recorded signal.
(3) Set the VCR to the manual tracking mode.
(4) Set the VCR to the EVR mode by transmitting the code (F1) from the Jig RCU.
(5) Set the EVR address to (F2) by transmitting the code (F3) from the Jig RCU.
(6) Set the slope of the oscilloscope to the channel having higher (D2) marker level of the Y OUT waveform [signal (A2)]. Then set the 100 kHz marker level to the “4” scale on the oscilloscope. In this condition, transmit the code (F4) from the Jig RCU to adjust so that the (D2) marker level reaches the specified value (G).

(7) Release the EVR mode of the VCR by transmitting the code (F1) from the Jig RCU again. (When the EVR mode is released, the adjusted data is memorized.)
(8) Repeat steps (2) to (7) in the mode (B2).

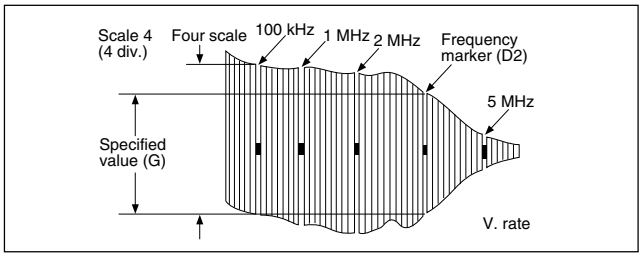

Fig. 3-3-4a Video EQ (Frequency Response)

3.3.5 Auto picture initial setting

Signal	(A1) (A2) (A3)	• Ext. input • Video: Optional • VHS tape
Mode	(B)	• EE → Auto adjust (SP/EP REC → PB)
Adjustment part	(F)	• Jig code “58”
Specified value	(G)	• STOP mode
Adjustment tool	(H)	• Jig RCU [PTU94023B]

(1) Insert the cassette tape (A3).
(2) Set the VCR to the Auto adjust mode by transmitting the code (F) from the Jig RCU. When the VCR enters the stop mode, the adjustment is completed. When the VCR enters the eject mode, repeat steps (1) to (2) again.

3.4 Audio circuit

Notes:

- ***This adjustment should be done after the “REC color (colour) level adjustment” for the video circuit has been completed.***
- ***GND (Ground) should be taken from the Tuner shield case.***

3.4.1 Audio REC FM

Signal	(A1) (A2) (A3)	• Ext. input • Audio: No signal • Video: Color (colour) bar signal [NTSC]
Mode	(B)	• S-VHS EP
Equipment	(C)	• Oscilloscope
Measuring point	(D)	• TP2253 (A. PB. FM)
External trigger	(E)	• TP111 (D.FF)
EVR mode EVR address	(F1) (F2) (F3) (F4)	• Jig code “57” • A : 30 • Jig code “23” and “20” • Jig code “18” or “19” (Channel +/-)
Specified value	(G1) (G2)	• 500 ± 100 mVp-p • More than 350 mVp-p
Adjustment tool	(H)	• Jig RCU [PTU94023B]

(1) Apply the external trigger signal to D.FF (E) to observe the Audio PB FM waveform at the measuring point (D).
(2) Record the signal (A3) with no audio signal input in the mode (B), and play back the recorded signal.
(3) Set the VCR to the manual tracking mode.
(4) If the A.PB FM level is not within the specified value (G1), perform the adjustment in a following procedure.
(5) Set the VCR to the EVR mode by transmitting the code (F1) from the Jig RCU.
(6) Set the EVR address to (F2) by transmitting the code (F3) from the Jig RCU.
(7) Transmit the code (F4) from the Jig RCU to adjust so that the A.PB FM level of the higher channel level becomes the specified value (G1). (Adjust before recording, then confirm it by playing back.)
(8) If the specified value (G1) is not obtained, transmit the code (F4) from the Jig RCU to adjust so that the waveform level of the lower channel level becomes the specified value (G2). (Adjust before recording, then confirm it by playing back.)
(9) Release the EVR mode of the VCR by transmitting the code (F1) from the Jig RCU again. (When the EVR mode is released, the adjusted data is memorized.)

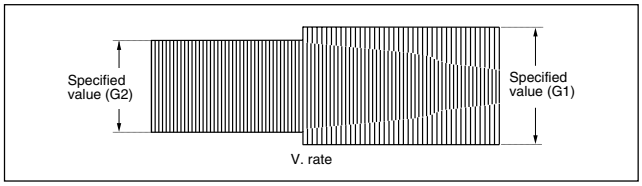

Fig. 3-4-1a Audio REC FM

3.5 Demodulator circuit

Notes:

- ***Unless otherwise specified in this demod circuit adjustments, all measuring points and adjustment parts are located on the Demod board.***
- ***Unless otherwise specified,set an audio multiplex TV signal generator as follows;***
  RF signal : 70 dBμ / 75Ω, color bar 87.5% modulation.

3.5.1 Input level

Signal	(A)	• RF signal (Audio: mono 300 Hz)
Mode	(B)	• Tuner • EE
Equipment	(C)	• Audio level meter
Measuring point	(D)	• IC1501 pin 26
EVR mode EVR address	(F1) (F2) (F3) (F4)	• Jig code “57” • A : 20 • Jig code “22” and “20” • Jig code “18” or “19” (Channel +/-)
Specified value	(G)	• 500 ± 10 mVrms
Adjustment tool	(H)	• Jig RCU [PTU94023B]

(1) Set an audio signal mode of the RF signal generator to mono 300 Hz.
(2) Connect the equipment (C) to the measuring point (D).
(3) Set the VCR to the EVR mode by transmitting the code (F1) from the Jig RCU.
(4) Set the EVR address to (F2) by transmitting the code (F3) from the Jig RCU.
(5) Transmit the code (F4) from the Jig RCU to adjust so that the level of the measuring point (D) becomes the specified value (G).
(6) Release the EVR mode of the VCR by transmitting the code (F1) from the Jig RCU again. (When the EVR mode is released, the adjusted data is memorized.)

3.5.2 Stereo VCO

Signal	(A)	• No signal
Mode	(B)	• Tuner • EE
Equipment	(C)	• Frequency counter
Measuring point	(D1)	• IC1501 pin 26
Short point	(D2)	• C1505(–) terminal
EVR mode EVR address	(F1) (F2) (F3) (F4)	• Jig code “57” • A : 21 • Jig code “22” and “21” • Jig code “18” or “19” (Channel +/-)
Specified value	(G)	• 15.73 ± 0.1 kHz
Adjustment tool	(H)	• Jig RCU [PTU94023B]

(1) Connect the short wire between the short point (D2) and the GND (Ground).
(2) Connect the equipment (C) to the measuring point (D1).
(3) Set the VCR to the EVR mode by transmitting the code (F1) from the Jig RCU.
(4) Set the EVR address to (F2) by transmitting the code (F3) from the Jig RCU.
(5) Transmit the code (F4) from the Jig RCU to adjust so that the frequency of the measuring point (D1) becomes the specified value (G).
(6) Release the EVR mode of the VCR by transmitting the code (F1) from the Jig RCU again. (When the EVR mode is released, the adjusted data is memorized.)
(7) Disconnect the short wire between the short point (D2) and the GND (Ground).

3.5.3 Stereo filter

Signal	(A)	• RF signal (Audio: No signal)
Mode	(B)	• Tuner • EE
Equipment	(C)	• Oscilloscope
Measuring point	(D)	• IC1501 pin 26
EVR mode EVR address	(F1) (F2) (F3) (F4)	• Jig code “57” • A : 22 • Jig code “22” twice • Jig code “18” or “19” (Channel +/-)
Specified value	(G)	• Minimum level
Adjustment tool	(H)	• Jig RCU [PTU94023B]

(1) Set an audio signal mode of the RF signal generator to no signal.
(2) Connect the equipment (C) to the measuring point (D).
(3) Set the VCR to the EVR mode by transmitting the code (F1) from the Jig RCU.
(4) Set the EVR address to (F2) by transmitting the code (F3) from the Jig RCU.
(5) Transmit the code (F4) from the Jig RCU to adjust so that the level of the measuring point (D) becomes the specified value (G).
(6) Release the EVR mode of the VCR by transmitting the code (F1) from the Jig RCU again. (When the EVR mode is released, the adjusted data is memorized.)

3.5.4 Separation - 1

Signal	(A)	• RF signal (Audio: L-ch 300 Hz 14% modulated)
Mode	(B)	• Tuner • EE
Equipment	(C)	• Audio level meter
Measuring point	(D)	• IC1501 pin 26
EVR mode EVR address	(F1) (F2) (F3) (F4)	• Jig code “57” • A : 23 • Jig code “22” and “23” • Jig code “18” or “19” (Channel +/-)
Specified value	(G)	• Minimum level
Adjustment tool	(H)	• Jig RCU [PTU94023B]

(1) Set an audio signal mode of the RF signal generator to alternate L-ch 300 Hz 14% modulated.
(2) Connect the equipment (C) to the measuring point (D).
(3) Set the VCR to the EVR mode by transmitting the code (F1) from the Jig RCU.
(4) Set the EVR address to (F2) by transmitting the code (F3) from the Jig RCU.
(5) Transmit the code (F4) from the Jig RCU to adjust so that the level of the measuring point (D) becomes the specified value (G).
(6) Release the EVR mode of the VCR by transmitting the code (F1) from the Jig RCU again. (When the EVR mode is released, the adjusted data is memorized.)

3.5.5 Separation - 2

Signal	(A)	• RF signal (Audio: L-ch 5 kHz 14% modulated)
Mode	(B)	• Tuner • EE
Equipment	(C)	• Audio level meter
Measuring point	(D)	• IC1501 pin 26
EVR mode EVR address	(F1) (F2) (F3) (F4)	• Jig code “57” • A : 24 • Jig code “22” and “24” • Jig code “18” or “19” (Channel +/-)
Specified value	(G)	• Minimum level
Adjustment tool	(H)	• Jig RCU [PTU94023B]

(1) Set an audio signal mode of the RF signal generator to alternate L-ch 5 kHz 14% modulated.
(2) Connect the equipment (C) to the measuring point (D).
(3) Set the VCR to the EVR mode by transmitting the code (F1) from the Jig RCU.
(4) Set the EVR address to (F2) by transmitting the code (F3) from the Jig RCU.
(5) Transmit the code (F4) from the Jig RCU to adjust so that the level of the measuring point(D) becomes the specified value (G).
(6) Release the EVR mode of the VCR by transmitting the code (F1) from the Jig RCU again. (When the EVR mode is released, the adjusted data is memorized.)

3.5.6 SAP VCO

Signal	(A)	• No. signal
Mode	(B)	• Tuner • EE
Equipment	(C)	• Frequency counter
Measuring point	(D1)	• IC1501 pin 26
Short point	(D2)	• C1505 (–) terminal
EVR mode EVR address	(F1) (F2) (F3) (F4)	• Jig code “57” • A : 25 • Jig code “22” and “25” • Jig code “18” or “19” (Channel +/-)
Specified value	(G)	• 78.67 ± 0.5 kHz
Adjustment tool	(H)	• Jig RCU [PTU94023B]

(1) Connect the short wire between the short point (D2) and the GND (Ground).
(2) Connect the equipment (C) to the measuring point (D1).
(3) Set the VCR to the EVR mode by transmitting the code (F1) from the Jig RCU.
(4) Set the EVR address to (F2) by transmitting the code (F3) from the Jig RCU.
(5) Transmit the code (F4) from the Jig RCU to adjust so that the frequency of the measuring point (D1) becomes the specified value (G).
(6) Release the EVR mode of the VCR by transmitting the code (F1) from the Jig RCU again. (When the EVR mode is released, the adjusted data is memorized.)
(7) Disconnect the short wire between the short point (D2) and the GND (Ground).

SECTION 4
CHARTS AND DIAGRAMS

NOTES OF SCHEMATIC DIAGRAM

Safety precautions
The Components identified by the symbol ⚠ are critical for safety. For continued safety, replace safety critical components only with manufacturer's recommended parts.

1. Units of components on the schematic diagram

Unless otherwise specified.

1) All resistance values are in ohm, 1/6 W, 1/8 W (refer to parts list).
   Chip resistors are 1/16 W.
   K or k: kΩ (1000Ω), M: MΩ (1000kΩ)
2) All capacitance values are in μF, (P: PF).
3) All inductance values are in μH, (m: mH).
4) All diodes are 1SS133, MA165 or 1N4148M (refer to parts list).

2. Indications of control voltage

AUX : Active at high

$\overline{\text{AUX}}$ or AUX(L) : Active at low

3. Interpreting Connector indications

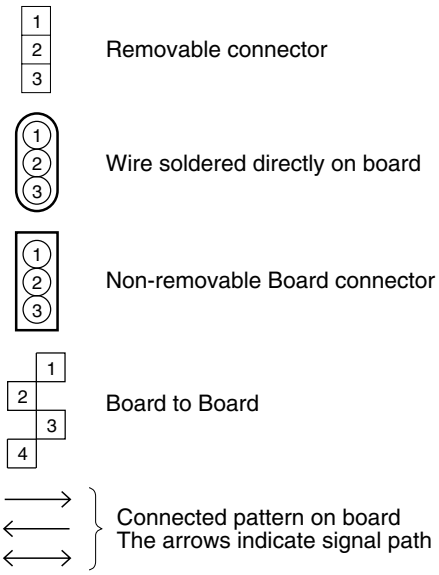

4. Voltage measurement

1) Video circuits
   REC : Colour bar signal in SP mode, normal VHS mode
   PB : Alignment tape, colour bar SP mode, normal VHS mode
   — : Unmeasurable or unnecessary to measure
2) Audio circuits
   REC : 1KHz, –8 dBs sine wave signal in SP mode, Normal VHS mode
   PB : REC then playback it
3) Movie Camera circuits
   Measured using a correctly illuminated gray scale or colour bar test charts in the E-E mode
4) Indication on schematic diagram
   Voltage Indications for REC and PB mode on the schematic diagram are as shown below.

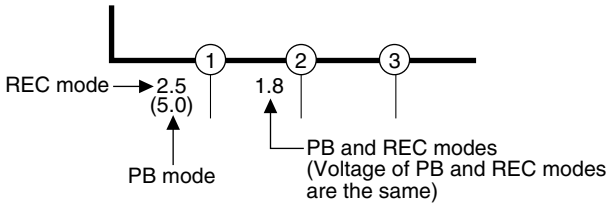

Note: If the voltages are not indicated on the schematic diagram, refer to the voltage charts.

5. Waveform measurement

1) Video circuits
   REC : Colour bar signal in SP mode, normal VHS mode
   PB : Alignment tape, colour bar SP mode, normal VHS mode
2) Audio circuits
   REC : 1KHz, –8 dBs sine wave signal in SP mode, normal VHS mode
   PB : REC then playback it
3) Movie Camera circuits
   Measured using a correctly illuminated gray scale or colour bar test chatrs in the E-E mode
4) Indication on schematic diagram
   Waveform indications on the schematic diagram are as shown below.

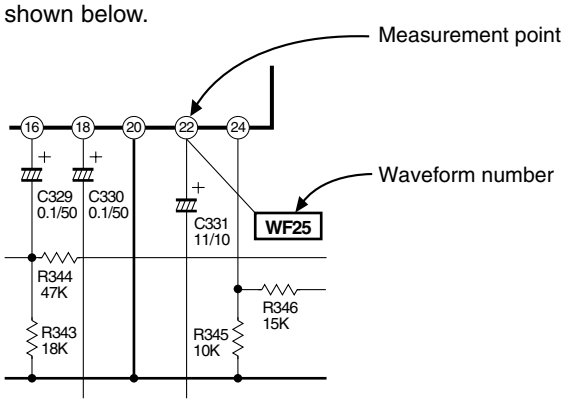

5) Waveform indications

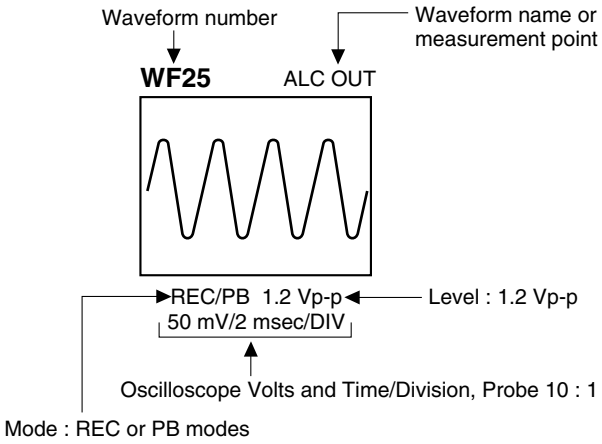

6. Signal path Symbols

The arrows indicate the signal path as follows.

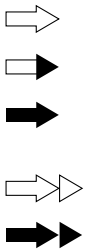

Playback signal path

Playback and recording signal path

Recording signal path
(including E-E signal path)

Capstan servo path

Drum servo path

(Example)

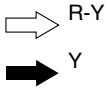

Playback R-Y signal path

Recording Y signal path

7. Indication of the parts for adjustments

The parts for the adjustments are surrounded with the circle as shown below.

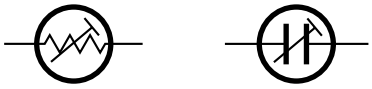

8. Indication of the parts not mounted on the circuit board

"OPEN" is indicated by the parts not mounted on the circuit board.

CIRCUIT BOARD NOTES

1. Foil and Component sides

1) Foil side (B side) :
   Parts on the foil side seen from foil face (pattern face) are indicated.
2) Component side (A side) :
   Parts on the component side seen from component face (parts face) indicated.

2. Parts location guides

Parts location are indicated by guide scale on the circuit board.

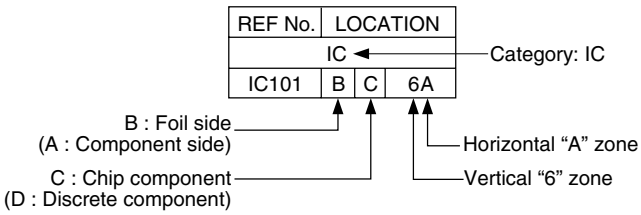

Note:

For general information in service manual, please refer to the Service Manual of GENERAL INFORMATION Edition 4 No. 82054D (January 1994).

4.1 BOARD INTERCONNECTIONS

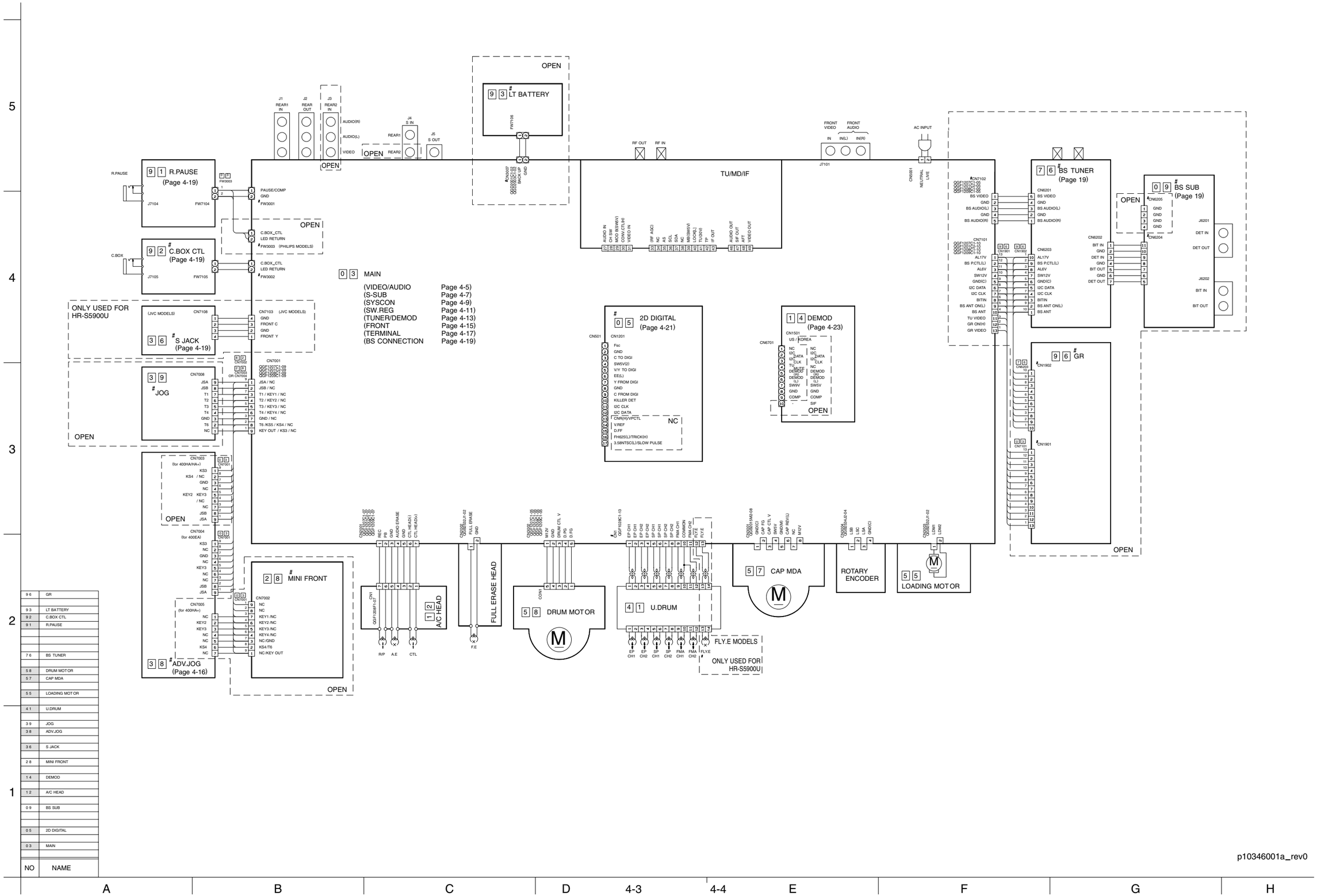

NO	NAME
9 6	GR
9 3	LT BATTERY
9 2	C.BOX CTL
9 1	R.PAUSE
7 6	BS TUNER
5 8	DRUM MOTOR
5 7	CAP MDA
5 5	LOADING MOTOR
4 1	U.DRUM
3 9	JOG
3 8	ADV.JOG
3 6	S JACK
2 8	MINI FRONT
1 4	DEMOD
1 2	A/C HEAD
0 9	BS SUB
0 5	2D DIGITAL
0 3	MAIN

4.2 MAIN (VIDEO/AUDIO) SCHEMATIC DIAGRAM

Note : The Parts Number, value and rated voltage etc. in the Schematic Diagram are for references only. When replacing the parts, refer to the Parts List.

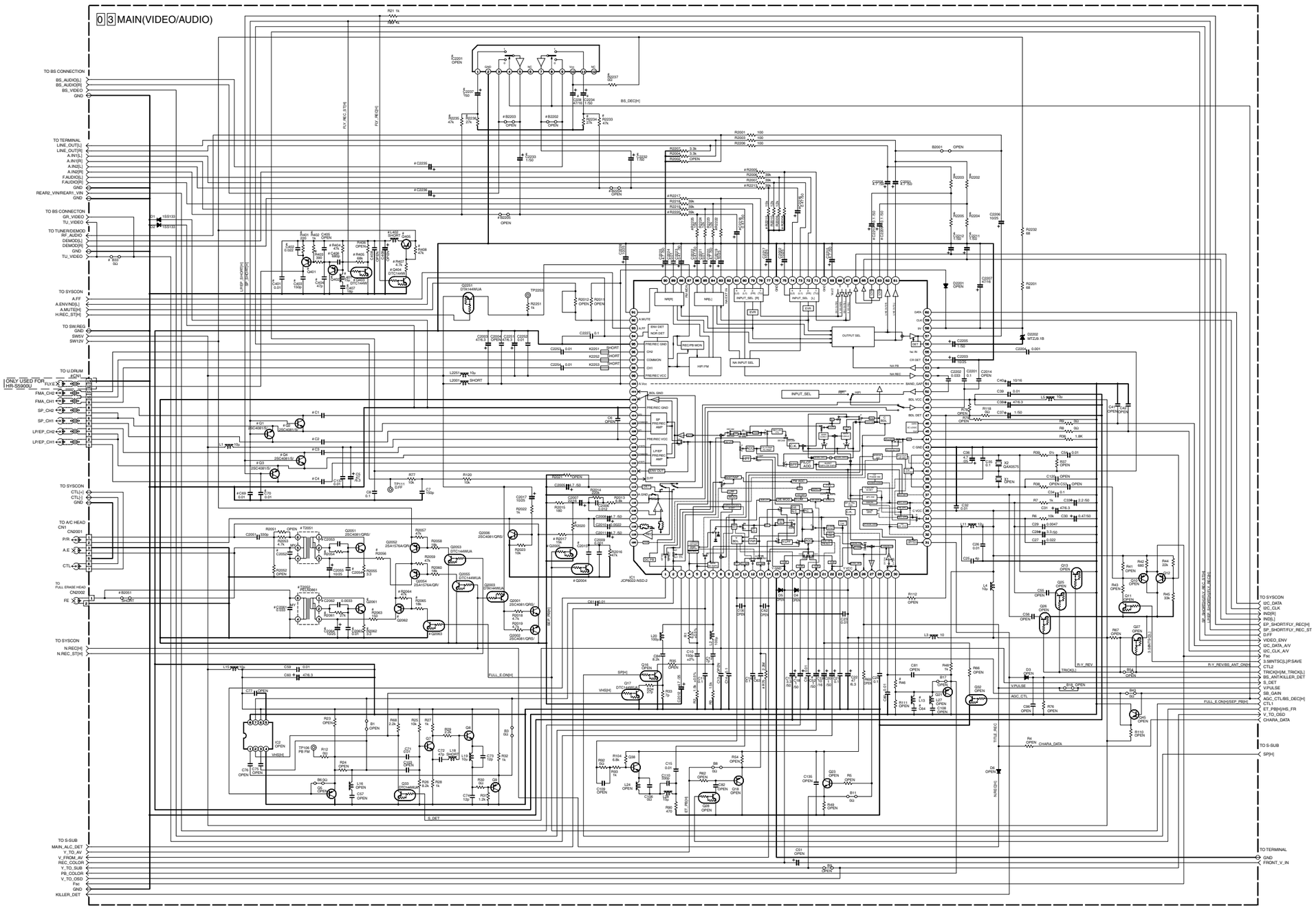

DIFFERENCE TABLE

MODEL		Q401-Q405 R401-R409	C401-C409 L401,L402	CN1	Q1-Q4 C69,C70	C1-C4
FLYING ERASE	YES	○		1-13 PIN	X	0.01
	NO	X		1-11 PIN	○	1

MODEL		C52	R2212,R2214 R2216,R2221
BS TUNER	YES	○	○
	NO	X	X

MODEL		C18	R2213,R2215,C2216 R2220,R2218,C2218
BS DECORDER OR L2_IN	YES	○	○
	NO	X	X

MODEL		R2202,R2203,R2204,R2205 C2203,C2210,C2211,C2212
L.IND	YES	○
	NO	X

MODEL		B33
GR TUNER	YES	X
	NO	○

MODEL		R75	C63
2D	X	0.1
3D	○	0.047

MODEL		R46	L13	C64
PB COL TRAP	2D(JVC)	470	100μ	12p
	2D(PCEC)	390	68μ	20p
	3D	270	100μ	12p

MODEL		T2051	R2054	R2056	C2052	C2053	C2054
A.DUB	YES	○					
	NO	X					

NOTES:UNLESS OTHERWISE SPECIFIED.
ALL RESISTANCE VALUES ARE IN OHMS.
ALL INDUCTANCE VALUES ARE IN H.
ALL CAPACITANCE VALUES ARE IN μF.
ALL NPN TYPE TRANSISTORS ARE 2SC4081/QRS/
ALL PNP TYPE TRANSISTORS ARE 2SA1576A/QR/
ELECTROLYTIC
CERAMIC
MYLER
NON POLAR

p10351001a_rev0

A B C D 4-5 4-6 E F G H

4.3 MAIN (S-SUB) SCHEMATIC DIAGRAM

Note : The Parts Number, value and rated voltage etc. in the Schematic Diagram are for references only. When replacing the parts, refer to the Parts List.

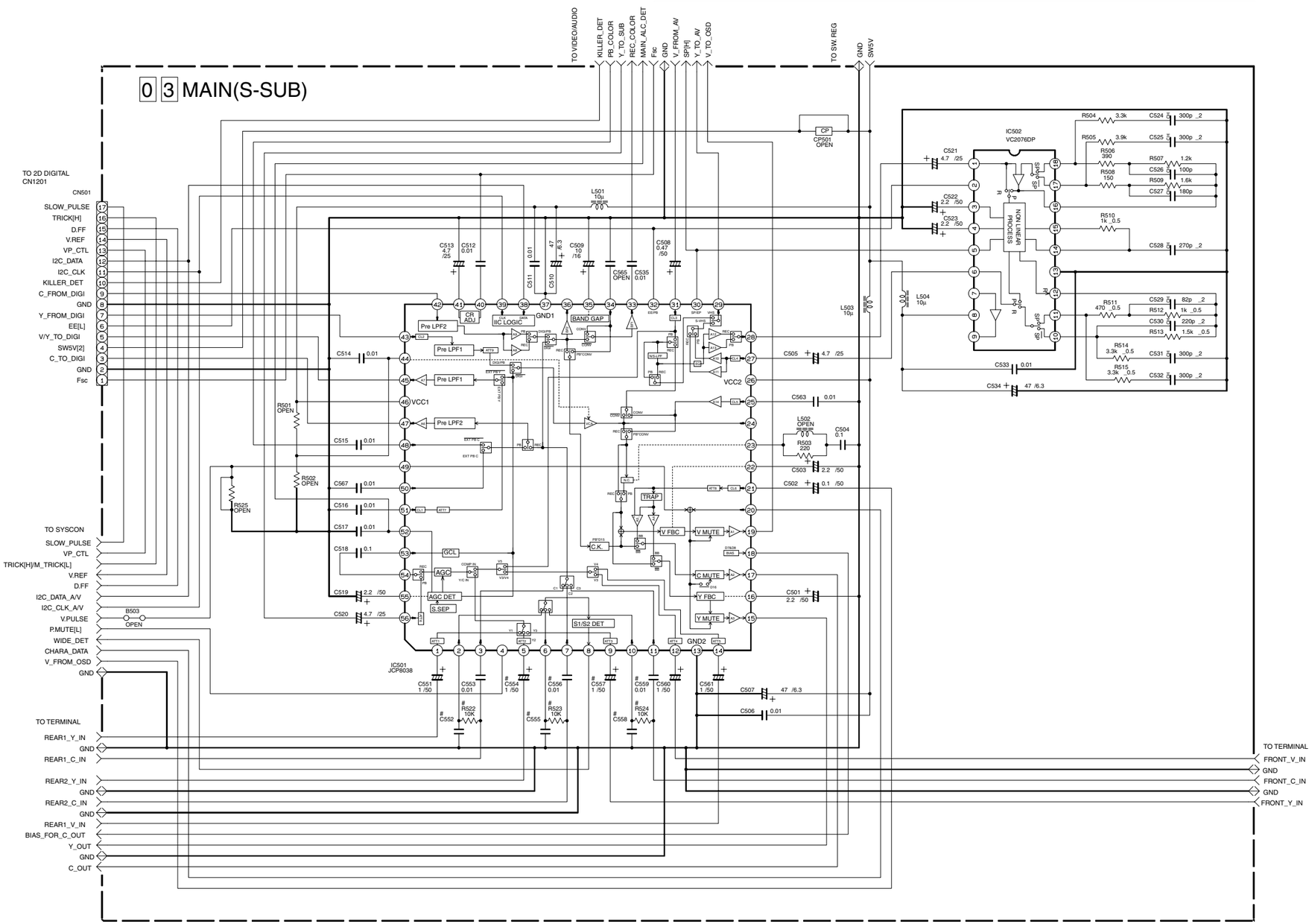

DIFFERENCE TABLE

MODEL \ SYMBOL	R523 C555 C554 C556	R522 C552 R524 C558	C557 C559	C555	C552 C558
S-VHS JPN F_S_IN REAR2_IN	○	○	○	0.01	0.01
S-VHS JPN F_S_IN	X	○	○	0Ω	0.01
S-VHS US F_S_IN	X	X	○	0Ω	0Ω
S-VHS US	X	X	X	0Ω	0Ω

NOTES:UNLESS OTHERWISE SPECIFIED.
ALL RESISTANCE VALUES ARE IN OHMS.
ALL INDUCTANCE VALUES ARE IN H.
ALL CAPACITANCE VALUES ARE IN μF.
ALL NPN TYPE TRANSISTORS ARE 2SC4081/QRS/
ALL PNP TYPE TRANSISTORS ARE 2SA1576A/QR/

ELECTROLYTIC
CERAMIC
MYLER
NON POLAR

p20210001a_rev0

4.4 MAIN (SYSCON) SCHEMATIC DIAGRAM

Note : The Parts Number, value and rated voltage etc. in the Schematic Diagram are for references only. When replacing the parts, refer to the Parts List.

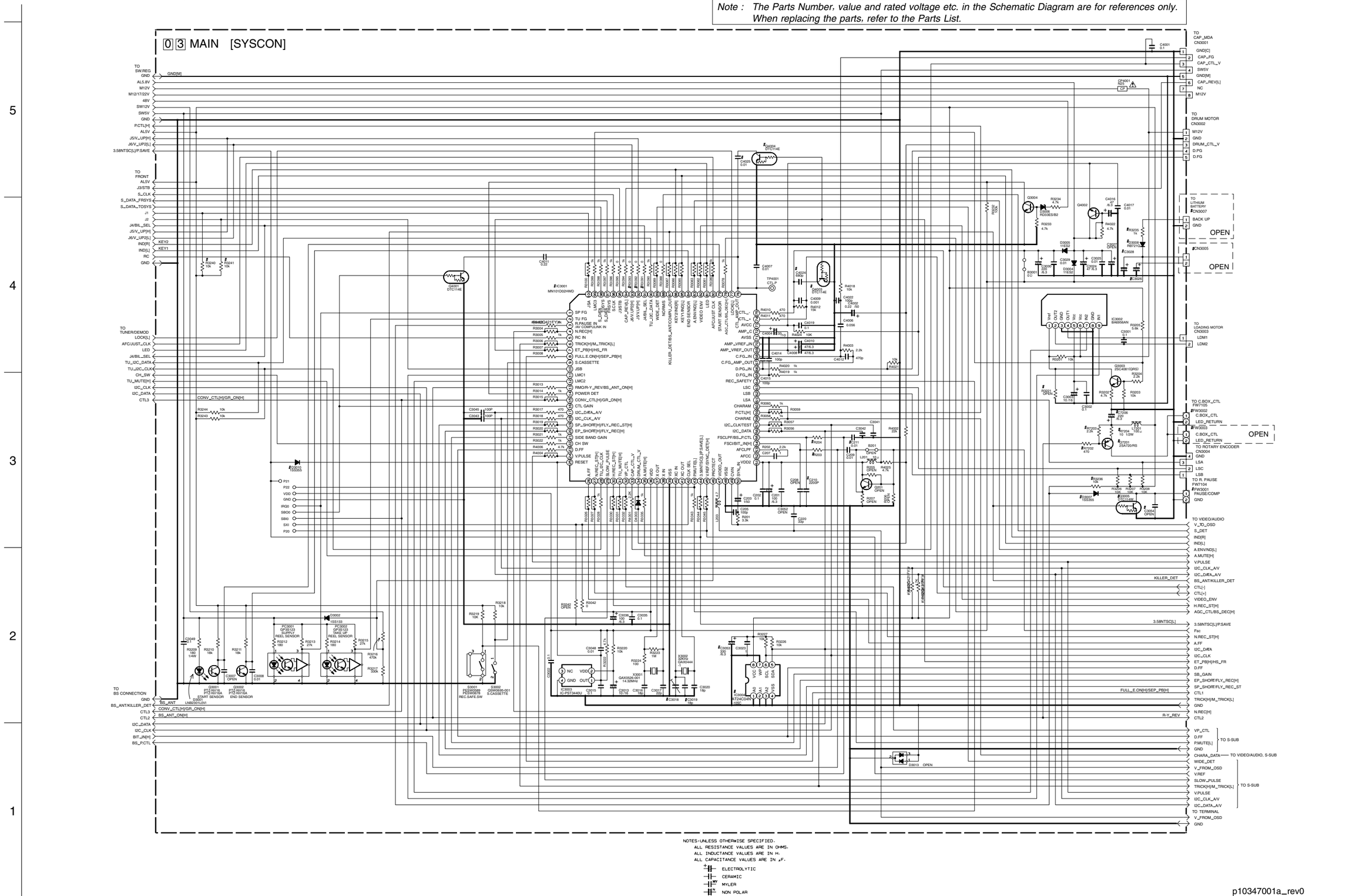

4.5 MAIN (SW.REG) SCHEMATIC DIAGRAM

Note : The Parts Number, value and rated voltage etc. in the Schematic Diagram are for references only. When replacing the parts, refer to the Parts List.

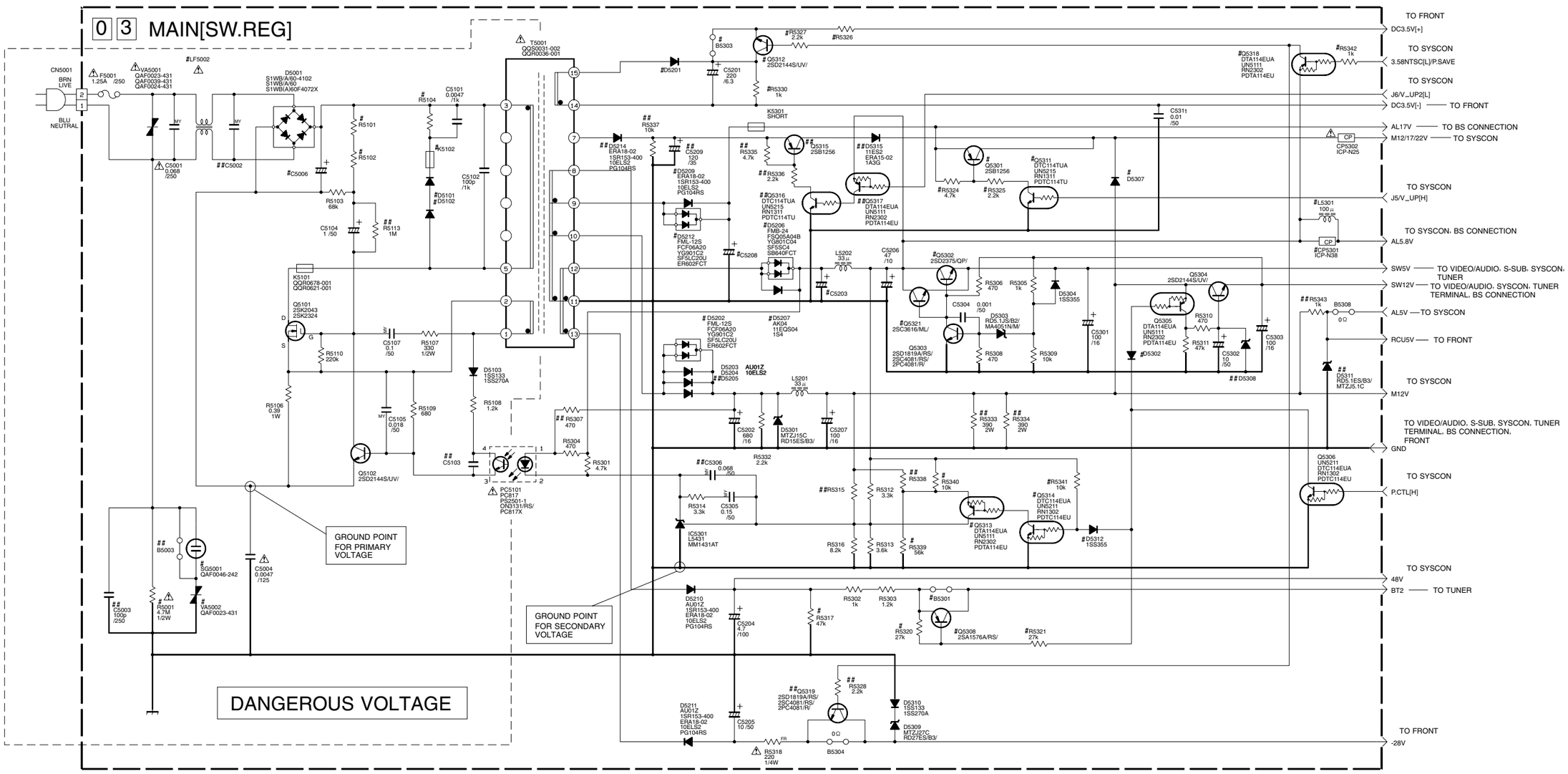

MARK ELEMENT ARE NOT MOUNTED

#DIFFERENCE TABLE 1

	C5006	C5203	L5301	CP5301	D5206	D5207	R5001	Q5302	Q5321
D1	82/200	680/10	SHORT	NO	NO	YES	NO	NO	YES
D5	150/200	1200/10	NO	YES	YES	NO	NO	YES	NO
S1	150/200	1200/10	YES	NO	YES	NO	NO	YES	NO
S1U	150/200	1200/10	YES	NO	YES	NO	YES	YES	NO
S5	150/200	Oct-00	NO	YES	YES	NO	NO	YES	NO

#DIFFERENCE TABLE 2

HIGH SPEED FF/REW	C5208	D5209	D5212	D5307	D5314 Q5301 Q5311	R5324 R5325
DOM(W/O BS)	180/25	YES	NO	1.10E+03 ERA15-02 1A3G	YES	
DOM(WITH BS)	330/25	NO	YES	1.10E+03 ERA15-02 1A3G	YES	
OTHER	NO	NO	NO	SHORT	NO	

#DIFFERENCE TABLE 3

POWER SAVE	R5104	B5301 B5303	D5312 Q5308 Q5312 Q5313 Q5314	Q5318 R5317 R5320 R5321 R5327	R5330 R5339 R5340 R5341 R5342	R5101 R5102	D5302
DOM	150k 2W	NO	YES			330k	1SS355
OTHER	68k 2W	YES	NO			220k	SHORT

#DIFFERENCE TABLE 4

LEVEL IND.		D5201	R5326
-NO-	DOM	AK04 11EQS04 1S4	3.9
	OTHER	AU01Z 10ELS2	0
-YES-		AK04 11EQS04 1S4	1

SURGE	VA5002 SG5001
PH	YES
OTHER	NO

#DIFFERENCE TABLE 6

	K5102	D5101 D5102
DOM	QQR0678-001 QQR0621-001	AU01 10ELS4
OTHER	SHORT	AU01 10ELS4 1SR153-400 ERA18-04

#DIFFERENCE TABLE 7

	LF5002
SVHS WITH BS	QQR0908-001 QQR0984-001
OTHER	QQR0532-001 QQR0533-001 QQR0516-001 QQR0816-001 QQR0932-001

p20184001a_rev1

4.6 MAIN (TUNER/DEMOD) SCHEMATIC DIAGRAM

Note : The Parts Number, value and rated voltage etc. in the Schematic Diagram are for references only. When replacing the parts, refer to the Parts List.

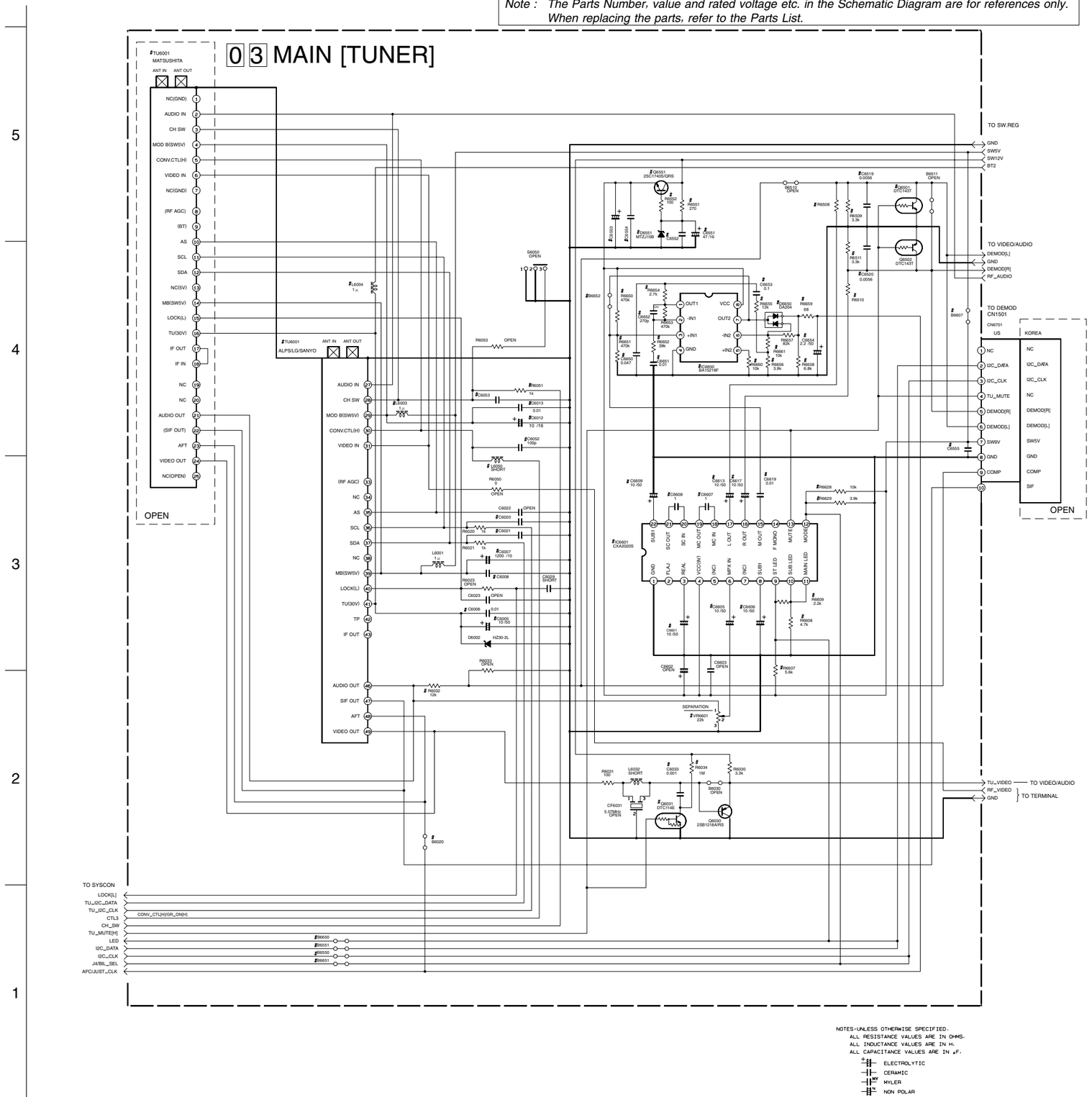

DIFFERENCE TABLE

		JPN	US	KR
TUNER				
AFC	B6020	×	○	○
MUTE	Q6031,R6034,C6033	×	×	×
RF CONV	L6003,L6050- R6050,R6051	×	○	○
US AUDIO	R6032	×	○	×
5V	C6007	○	×	×
	C6005,C6008,C6012, C6013,C6020,C6021, C6052,C6053	×	×	×
DEMOD				
UNIT	CN6701	×	US	KR
MUTE	Q6501,Q6502	×	×	×
REG	Q6551-Q6551- R6551-R6552	○	○	×
I2C	B6550-B6551	×	○	○
AUDIO OUT	R6508,R6510	12k	0	0
	R6509,R6511, C6519-C6520	○	×	×
JPN	IC6601-IC6650- D6650,VR6601, R6607-R6609- R6628,R6629, R6650-R6661-C6601- C6605-C6609-C6613- C6617-C6619- C6650-C6654 B6650,B6651	○	×	×
KR	B6607	×	×	○

NOTES:UNLESS OTHERWISE SPECIFIED.
ALL RESISTANCE VALUES ARE IN OHMS.
ALL INDUCTANCE VALUES ARE IN H.
ALL CAPACITANCE VALUES ARE IN μF.
ELECTROLYTIC
CERAMIC
MYLER
NON POLAR

p10345001a_rev1

4.7 MAIN (FRONT) AND ADV.JOG SCHEMATIC DIAGRAMS

Note : The Parts Number, value and rated voltage etc. in the Schematic Diagram are for references only. When replacing the parts, refer to the Parts List.

MODEL TYPE \ SYMBOL		DI7001 IC7001 R7001 R7002 R7003 R7004 R7005 R7006 R7007 R7008 R7009 R7011 R7012 R7013 R7014 R7015 R7016 C7002 C7005 C7006 C7007 C7008 C7011 D7001 D7003 D7004 D7005 D7006 B7002 B7003 B7004 B7005 B7006 B7007	DI7002 IC7002 Q7001 Q7002 Q7003 Q7004 Q7005 R7019 R7020 R7021 R7023 R7024 R7025 R7030 R7031 R7032 R7033 R7037 R7044 C7012 C7013 C7014 B7008 B7009 B7010 B7011	R7034	R7036	D7007	R7022 R7026	R7035	B7012 B7015	B7013	B7014	B7016 B7017 B7018 B7019	B7001	B7020	B7021	CN7001
with FDP	with AJ & MINI OPE	○	×	×	×	×	SHORT	SHORT	×	○	○	×	○	○	×	○
	with Adv.JOG	○	×	×	×	×	SHORT	SHORT	×	○	×	×	×	○	×	○
	with J/S	○	×	×	×	○	SHORT	SHORT	○	○	○	×	×	×	×	○
	with S/P	○	×	×	×	○	SHORT	SHORT	○	○	○	×	×	○	×	○
	with MINI OPE	○	×	×	×	×	SHORT	SHORT	○	○	○	×	○	×	×	○
	OTHERS	○	×	×	×	×	SHORT	SHORT	×	×	×	×	×	×	×	×
with 7seg LED	with Adv.JOG	×	○	○	○	×	○	4.7k	×	×	×	×	×	×	×	○
	with J/S	×	○	○	○	×	○	4.7k	×	×	×	○	×	×	×	○
	with S/P	×	○	○	○	×	○	4.7k	×	×	×	○	×	×	×	○
	with MINI OPE	×	○	SHORT	×	×	○	×	×	×	×	×	×	×	○	○
	OTHERS	×	○	○	○	×	○	4.7k	×	×	×	×	×	×	×	×

0 3 CN7001 PIN No.	3 8 CN7003 CN7004 PIN No.	FDP						LED				
		AJ+	Adv.JOG	J/S	S/Play	MINI OPE	OTHERS	Adv.JOG	J/S	S/Play	MINI OPE	OTHERS
1	9	JSA	JSA	JSA	NC	NC	NC	JSA	JSA	NC	NC	NC
2	8	JSB	JSB	JSB	NC	NC	NC	JSB	JSB	NC	NC	NC
3	7	NC	NC	T1	T1	KEY1	NC	NC	T1	T1	NC	NC
4	6	KEY2	NC	T2	T2	KEY2	NC	NC	T2	T2	NC	NC
5	5	KEY3	KEY3	T3	T3	KEY3	NC	NC	T3	T3	NC	NC
6	4	NC	NC	T4	T4	KEY4	NC	NC	T4	T4	NC	NC
7	3	GND	GND	GND	GND	NC	NC	GND	GND	GND	GND	NC
8	2	KS4	NC	KS5	KS5	KS4	NC	T6	NC	T6	T6	NC
9	1	KS3	KS3	NC	KS3	NC	NC	NC	NC	NC	KEY OUT	NC

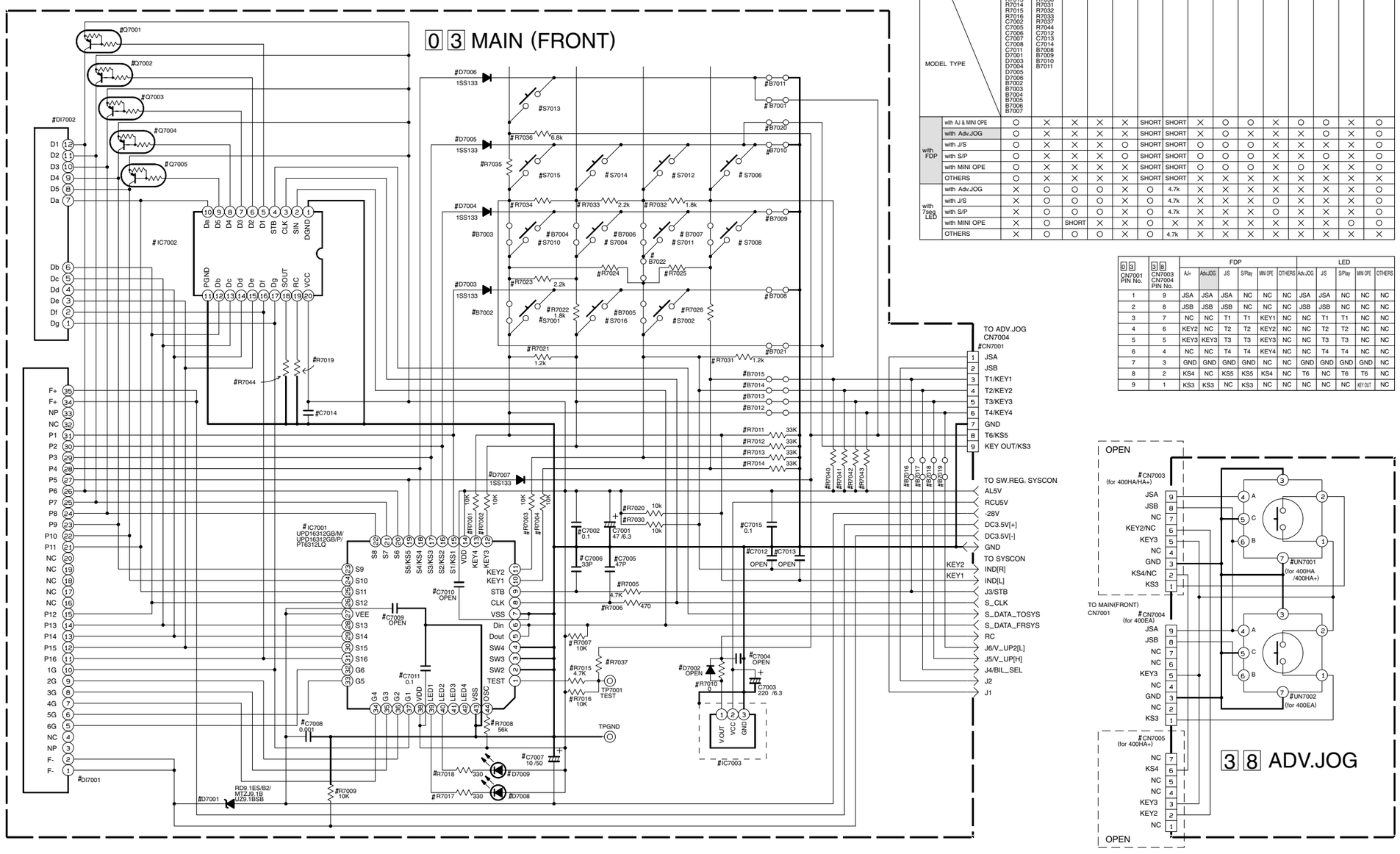

SYMBOL / LED	R7017 D7008	R7018 D7009
for S7002	○	×
for S7016	×	○

RCU	R7010	C7004 D7002	IC7003
JVC	SHORT	×	GP1U291Q PNA4652MOOYC PIC-28143LJ
PHILIPS	SHORT	×	GP1U290Q PNA4655MOOYC PIC-28142LJ

NOTES: UNLESS OTHERWISE SPECIFIED.
ALL RESISTANCE VALUES ARE IN OHMS.
ALL INDUCTANCE VALUES ARE IN H.
ALL CAPACITANCE VALUES ARE IN μF.

ELECTROLYTIC
CERAMIC
MYLER
NON POLAR

p20204001a_rev0.1

4.8 MAIN (TERMINAL) SCHEMATIC DIAGRAM

Note : The Parts Number, value and rated voltage etc. in the Schematic Diagram are for references only. When replacing the parts, refer to the Parts List.

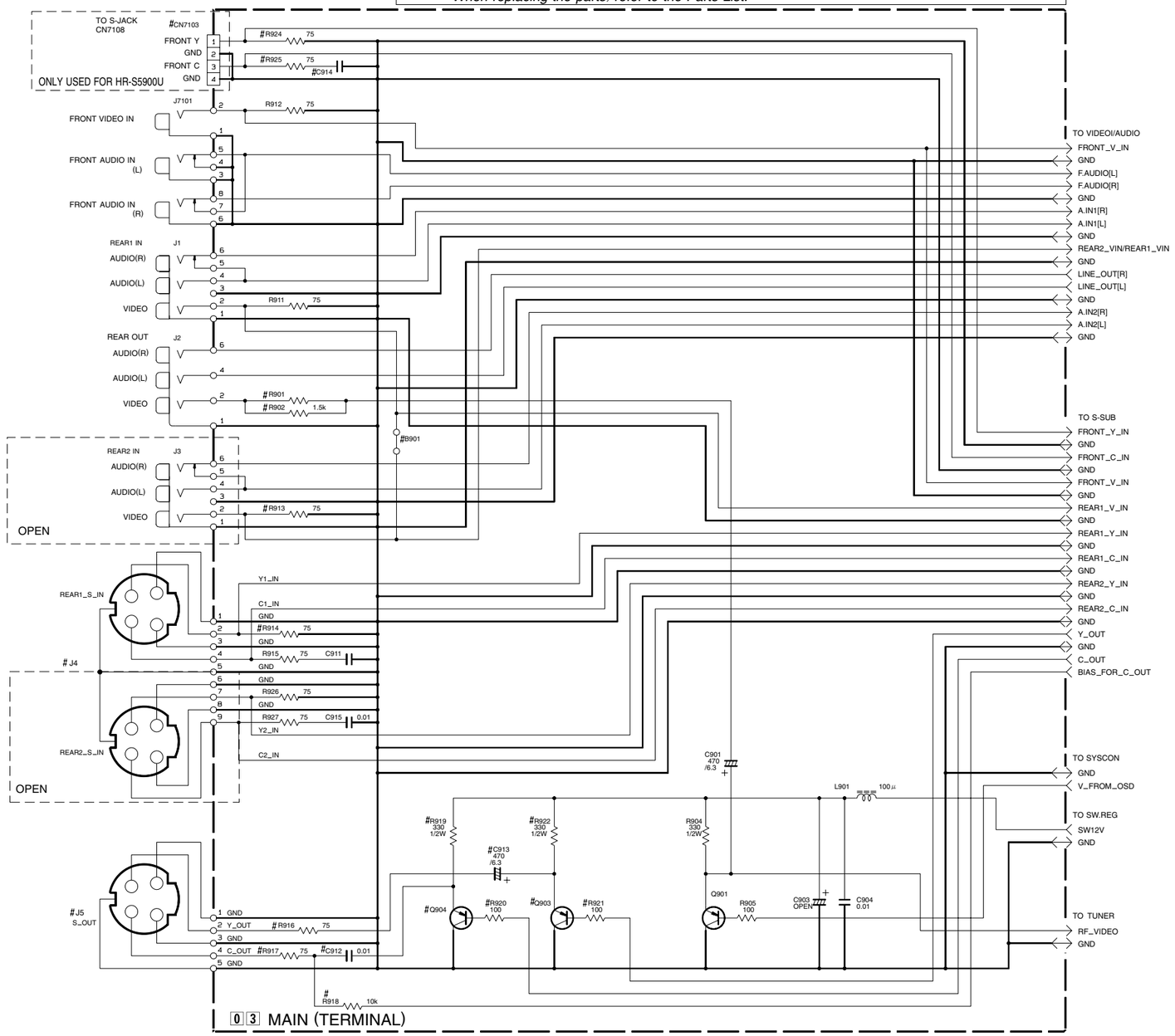

DIFFERENCE TABLE

○ : Used
× : Not used

MODEL \ SYMBOL	R913 J3	J4	R924 R925 CN7103	C914	R926 R927 C915	R918	C911	R902 R914-R917 R919-R922	Q903.Q904 C912.C913 J5	B901	R901
S-VHS JPN F_S_IN REAR2_IN	○	S1/S2	○	0.01	○	○	0.01	○		X	82
S-VHS JPN F_S_IN	X	S1	○	0.01	X	○	0.01	○		X	82
S-VHS US F_S_IN	X	S1	○	0Ω	X	X	0Ω	○		X	82
S-VHS US	X	S1	X	X	X	X	0Ω	○		X	82
VHS	X	X	X	X	X	X	X	X		○	75

NOTES:UNLESS OTHERWISE SPECIFIED.
ALL RESISTANCE VALUES ARE IN OHMS.
ALL INDUCTANCE VALUES ARE IN H.
ALL CAPACITANCE VALUES ARE IN μF.
ALL NPN TYPE TRANSISTORS ARE 2SC4081/QRS/
ALL PNP TYPE TRANSISTORS ARE 2SA1576A/QR/

ELECTROLYTIC
CERAMIC
MYLER
NON POLAR

p20206001a_rev0

4.9 MAIN (BS CONNECTION), S-JACK, R.PAUSE AND C.BOX CTL SCHEMATIC DIAGRAMS

Note : The Parts Number, value and rated voltage etc. in the Schematic Diagram are for references only. When replacing the parts, refer to the Parts List.

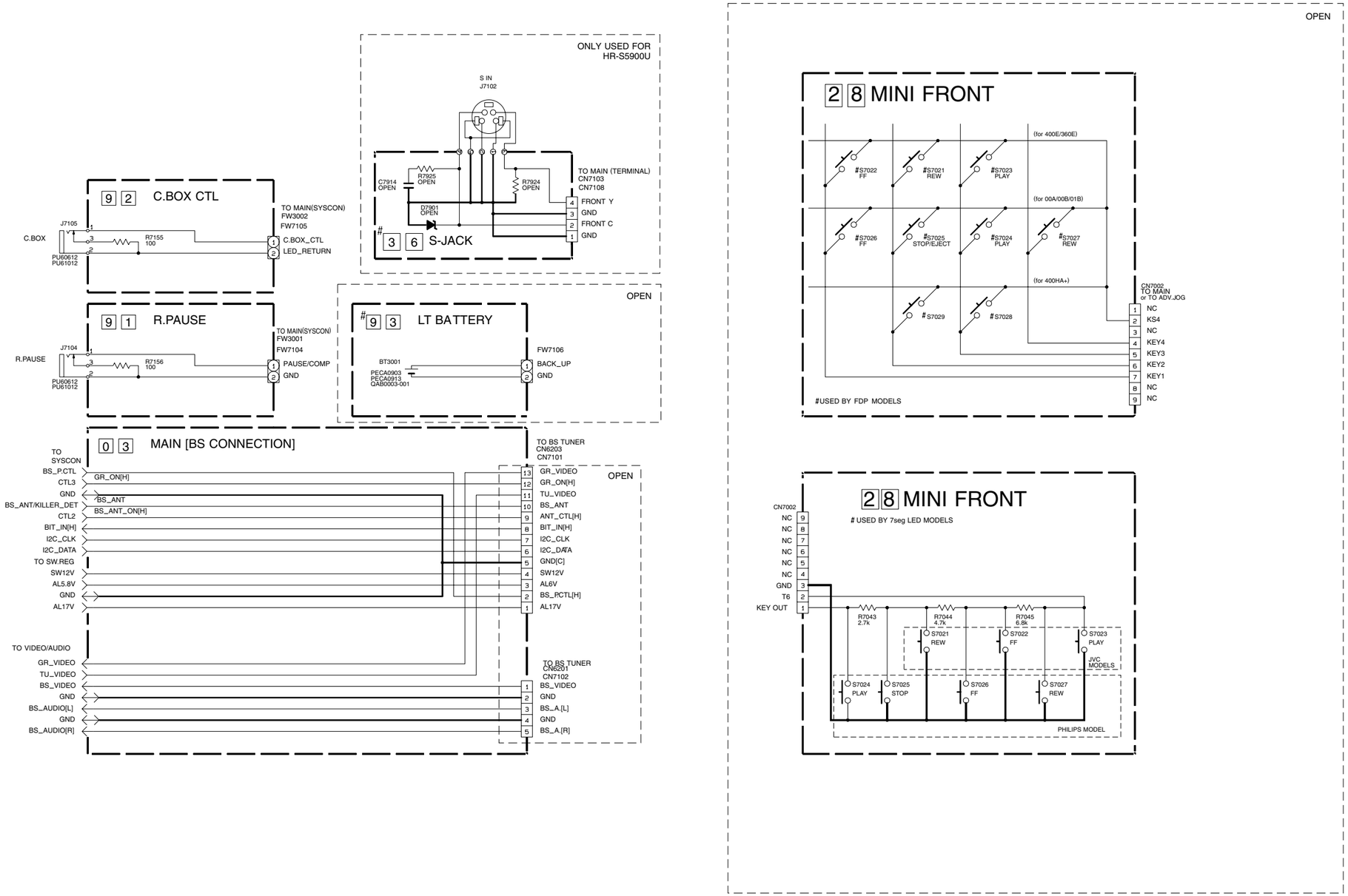

0 3

	BS MODELS	GR MODELS
CN7101	1-10	1-13

NOTES:UNLESS OTHERWISE SPECIFIED.
ALL RESISTANCE VALUES ARE IN OHMS.
ALL INDUCTANCE VALUES ARE IN H.
ALL CAPACITANCE VALUES ARE IN μF.

ELECTROLYTIC
CERAMIC
MYLER
NON POLAR

p20205001a_rev0

Note : The Parts Number, value and rated voltage etc. in the Schematic Diagram are for references only. When replacing the parts, refer to the Parts List.

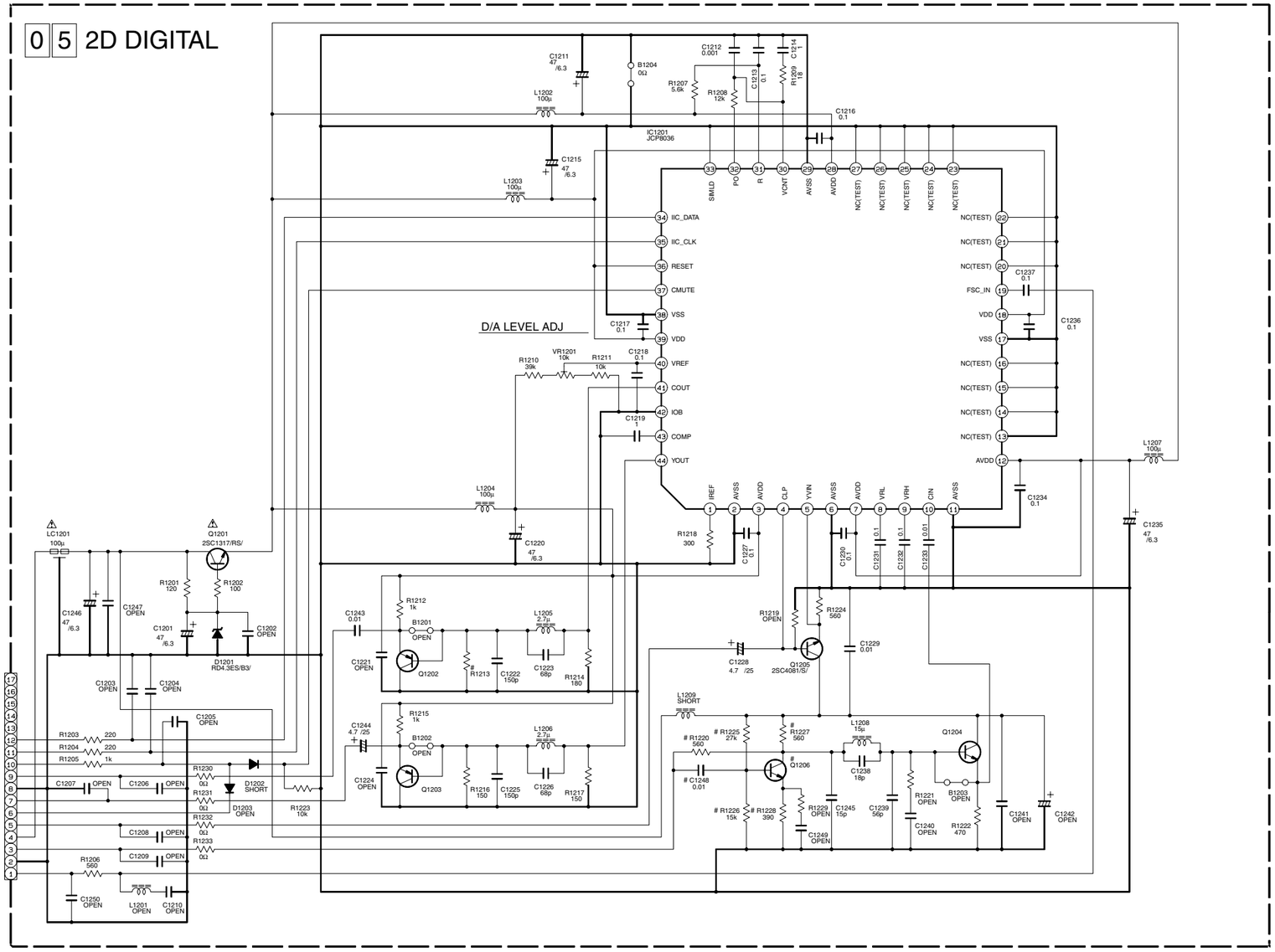

DIFFERENCE TABLE

MODEL \ SYMBOL	Q1206 R1225-R1228 C1248	R1220	R1213
PCEC	○	X	150
OTHER	X	○	180

NOTES:UNLESS OTHERWISE SPECIFIED.
ALL RESISTANCE VALUES ARE IN OHMS.
ALL INDUCTANCE VALUES ARE IN H.
ALL CAPACITANCE VALUES ARE IN μF.
ALL NPN TYPE TRANSISTORS ARE 2SC4081/QRS/.
ALL PNP TYPE TRANSISTORS ARE 2SA1576A/QR/.

ELECTROLYTIC
CERAMIC
MYLER
NON POLAR

p20211001a_rev0

4.11 DEMODULATOR SCHEMATIC DIAGRAM

Note : The Parts Number, value and rated voltage etc. in the Schematic Diagram are for references only. When replacing the parts, refer to the Parts List.

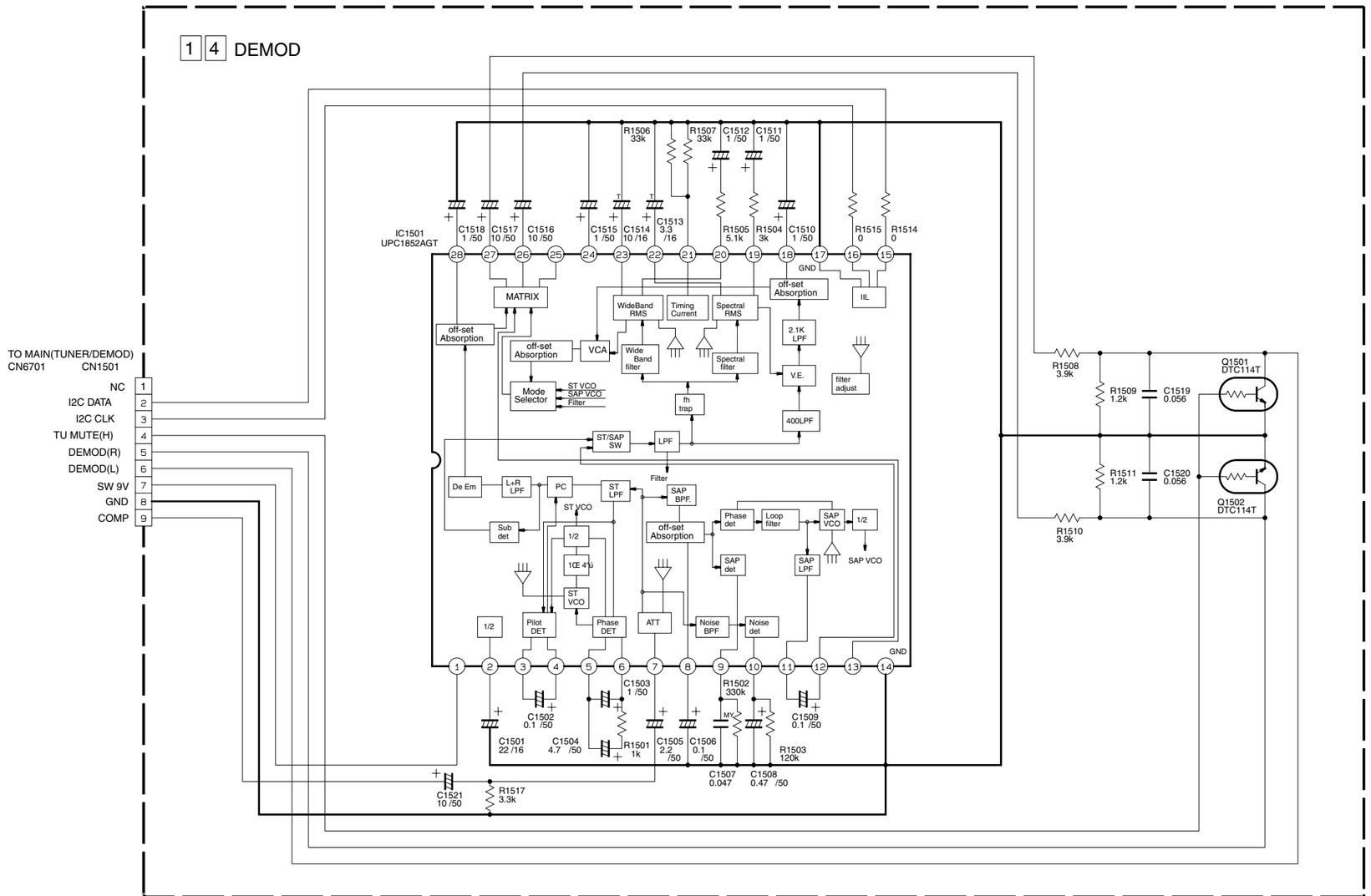

NOTES:UNLESS OTHERWISE SPECIFIED.
ALL RESISTANCE VALUES ARE IN OHMS.
ALL INDUCTANCE VALUES ARE IN H.
ALL CAPACITANCE VALUES ARE IN μF.

ELECTROLYTIC
CERAMIC
TANTAL

p97596_rev0

4.12 MAIN, R.PAUSE AND C.BOX CTL CIRCUIT BOARDS

<03>MAIN,<91>R.PAUSE,<92>C.BOX CTL
LPB10134-001E

DANGEROUS VOLTAGE

CAUTION :
FOR CONTINUED PROTECTION AGAINST FIRE HAZARD, REPLACE ONLY WITH SAME TYPE AND RATED FUSE(S).
FOR CONTINUED PROTECTION AGAINST FIRE HAZARD, REPLACE ONLY WITH SAME TYPE CP(S) MANUFACTURED BY ROHM.
ATTENTION :
REPLACER PAR DES FUSIBLE DE MEME TYPE.

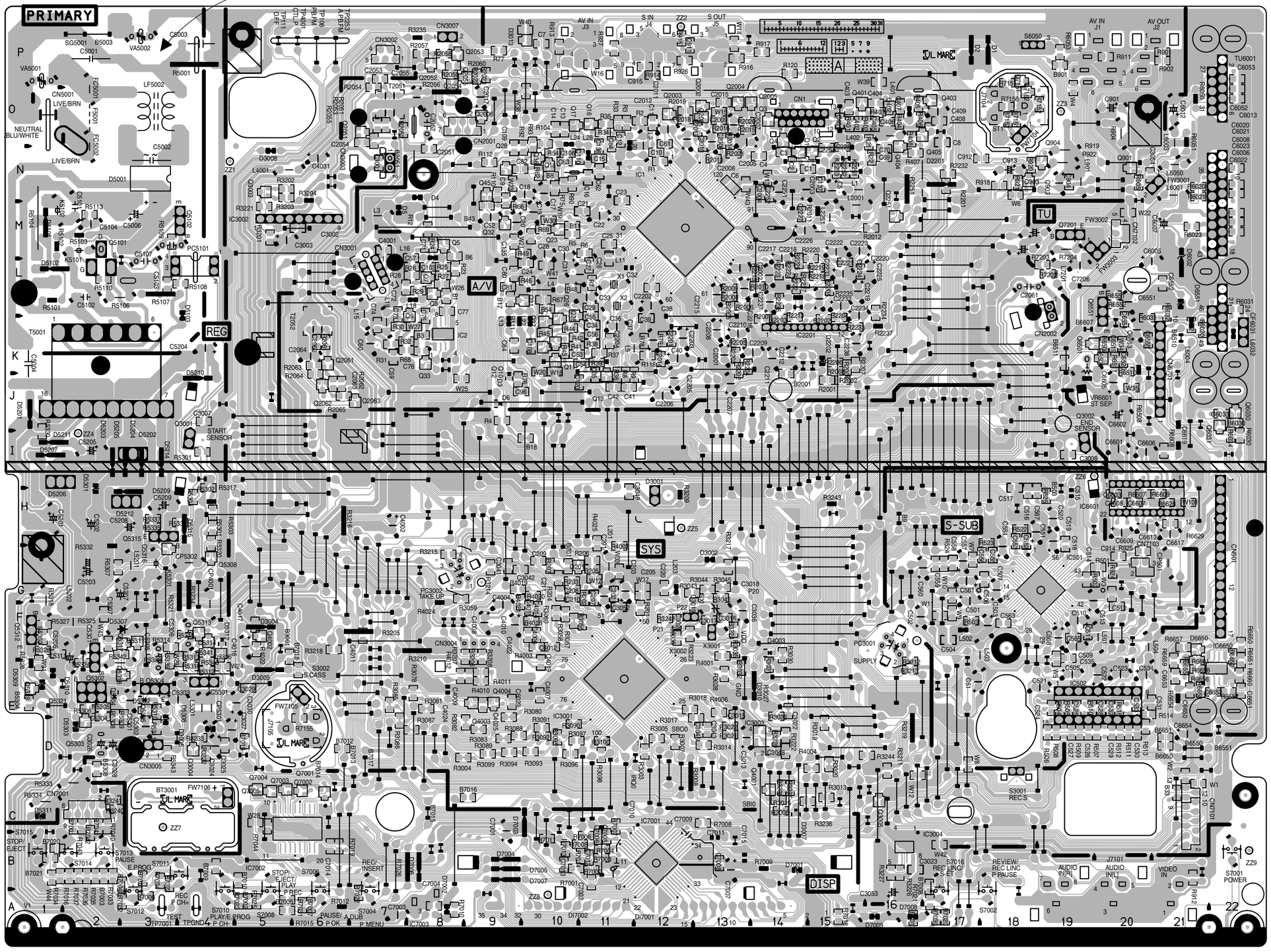

COMPONENT PARTS LOCATION GUIDE
＜MAIN, R.PAUSE AND C.BOX CTL ＞

REF.NO.	LOCATION
CAPACITOR	
C1	B C 15N
C2	B C 14N
C3	B C 14N
C4	B C 14N
C5	A D 15N
C6	B C 13N
C7	B C 10P
C8	B C 17O
C9	B C 9N
C10	B C 12N
C11	B C 12O
C12	B C 11O
C13	B C 10O
C14	B C 10O
C15	B C 11N
C16	B C 11N
C17	A D 10N
C18	A D 10N
C19	A D 10M
C20	A D 9M
C21	B C 11M
C22	A D 11M
C23	B C 11N
C24	B C 10L
C25	B C 11M
C26	B C 11M
C27	B C 11L
C28	A D 10M
C29	B C 11L
C30	A D 10M
C31	A D 11L
C32	A D 11L
C33	A D 11L
C34	B C 11K
C35	B C 11J
C36	A D 11K
C37	A D 12K
C38	A D 12L
C39	B C 12K
C40	A D 12K
C41	B C 11J
C42	B C 17E
C51	A D 9M
C52	A D 9M
C53	B C 10K
C54	B C 11K
C55	B C 11L
C56	B C 11K
C57	B C 8M
C59	B C 7K
C60	A D 7K
C61	B C 12O
C62	B C 11N
C63	B C 10N
C64	B C 9K
C69	B C 16N
C70	B C 16N
C71	B C 8M
C72	B C 7L
C73	B C 7L
C74	B C 7K
C75	B C 8L
C76	B C 8K
C77	B C 8L
C80	B C 9L
C81	B C 9L
C82	B C 9N
C84	B C 11N
C96	B C 10J
C103	B C 8L
C106	B C 10N
C108	B C 10K
C109	B C 9N
C110	B C 11N
C120	B C 11J
C135	B C 9M
C136	B C 11N
C137	B C 15N
C201	A D 11G
C202	B C 11G
C203	A D 11G
C205	B C 12G
C207	B C 11G
C208	B C 10G
C209	B C 10G
C210	B C 10G
C211	B C 10G
C220	B C 12G
C401	B C 15O
C402	B C 15O
C403	B C 15O
C404	B C 16O
C405	B C 16O
C406	B C 16O
C407	B C 16O
C408	B C 17O
C409	A D 17O
C501	A D 17G
C502	A D 16F
C503	A D 18F
C504	B C 17F
C505	A D 19E
C506	B C 18G
C507	A D 18G
C508	A D 19F
C509	A D 19F
C510	A D 19F
C511	B C 19F
C512	B C 20F
C513	A D 19F
C514	B C 19G
C515	A D 19H
C516	B C 18H
C517	B C 18I
C518	B C 19H
C519	A D 19G
C520	A D 19H
C521	A D 19E
C522	A D 20E
C523	A D 20E
C524	B C 19E
C525	B C 19E
C526	B C 19D
C527	B C 19D
C528	B C 20E
C529	B C 20D
C530	B C 20D
C531	B C 21E
C532	B C 20E
C533	B C 20E
C534	A D 20E
C535	B C 19F
C551	A D 18H
C552	B C 18H
C553	B C 18H
C554	A D 18G
C555	B C 18G
C556	B C 18G
C557	A D 17G
C558	B C 17G
C559	B C 17G
C560	A D 17G
C561	A D 17G
C563	B C 18F
C565	B C 19F
C567	B C 19H
C901	A D 20O
C903	A D 19N
C904	B C 19N
C911	B C 12P
C912	B C 18N
C913	A D 18N
C914	B C 20G
C915	B C 12P
C2001	A D 13K
C2002	A D 14L
C2003	A D 14N
C2004	B C 14N
C2005	A D 14O
C2006	B C 13O
C2007	A D 13O
C2008	A D 13N
C2009	B C 13O
C2010	B C 13O
C2011	A D 12O
C2012	A D 12O
C2014	B C 12K
C2015	B C 13O
C2017	A D 9O
C2051	B C 8N
C2052	A D 8O
C2053	B C 7P
C2054	B C 7O
C2055	A D 8O
C2061	A D 19L
C2062	B C 6K
C2063	B C 6J
C2064	A D 6K
C2201	B C 12K
C2202	B C 12L
C2203	A D 12K
C2204	B C 11K
C2205	A D 12J
C2206	A D 12J
C2207	A D 13J
C2208	A D 13K
C2209	A D 13K
C2210	A D 13K
C2211	A D 14K
C2212	A D 14K
C2215	A D 13L
C2216	A D 13L
C2217	A D 13L
C2218	A D 14M
C2219	A D 15L
C2220	A D 15L
C2221	B C 15L
C2222	A D 15M
C2223	A D 15M
C2224	B C 15L
C2225	A D 16L
C2226	A D 14M
C2227	B C 14M
C2232	A D 15L
C2233	A D 15L
C2234	A D 15L
C2235	A D 18M
C2236	A D 18M
C2237	A D 14L
C2238	A D 15K
C2251	A D 14N
C2252	B C 14N
C2253	B C 15N
C2254	B C 15N
C3001	B C 7N
C3002	B C 6M
C3003	A D 5M
C3007	B C 4J
C3008	B C 19I
C3013	A D 13D
C3015	B C 13E
C3016	B C 13F
C3017	B C 13F
C3018	A D 13F
C3019	B C 13F
C3020	B C 12F
C3022	B C 14D
C3023	B C 16B
C3024	A D 4D
C3025	B C 4D
C3026	A D 2D
C3027	A D 4D
C3028	A D 2D
C3029	B C 5E
C3030	A D 5E
C3035	B C 12F
C3036	A D 13F
C3041	B C 9G
C3042	B C 9G
C3043	B C 13D
C3045	B C 13D
C3048	B C 14D
C3049	B C 11H
C3052	B C 11F
C3053	A D 16A
C3054	B C 20N
C4001	B C 7M
C4002	A D 7H
C4004	A D 9F
C4006	B C 10F
C4007	B C 10E
C4008	A D 9F
C4009	B C 9E
C4010	A D 9F
C4011	B C 7F
C4012	A D 7M
C4014	B C 10F
C4015	B C 10F
C4016	A D 5F
C4017	B C 5F
C4019	B C 10E
C4022	B C 10F
C4024	A D 8E
C4025	B C 9E
C4031	A D 6N
C5001	A D 2P
C5002	A D 4N
C5003	A D 4P
C5004	A D 1K
C5006	A D 3M
C5101	A D 2N
C5102	A D 2L
C5103	B C 3L
C5104	A D 2M
C5105	A D 3M
C5107	A D 3L
C5201	A D 1H
C5202	A D 2H
C5203	A D 2G
C5204	A D 4K
C5205	A D 2I
C5206	A D 2E
C5207	A D 3G
C5208	A D 3H
C5209	A D 3H
C5214	A D 3I
C5301	A D 3E
C5302	A D 3D
C5303	A D 3E
C5304	B C 2E
C5305	A D 3F
C5306	A D 4F
C5307	A D 2F
C5308	A D 3D
C5309	A D 1E
C5310	A D 1E
C5311	A D 1C
C5312	B C 4F
C5315	A D 4H
C6002	A D 21L
C6012	A D 21O
C6013	B C 22O
C6020	B C 22N
C6021	B C 22N
C6022	B C 22N
C6023	B C 22M
C6029	B C 9E
C6033	B C 22J
C6052	B C 22O
C6053	B C 22P
C6519	B C 20K
C6520	B C 20K
C6551	A D 20L
C6552	B C 21L
C6553	A D 20K
C6554	B C 20K
C6555	B C 20K
C6601	A D 20I
C6602	A D 20J
C6603	B C 20H
C6605	A D 20J
C6606	A D 20I
C6607	B C 20H
C6608	B C 20H
C6609	A D 20H
C6613	A D 20H
C6617	A D 21H
C6619	A D 21I
C6650	B C 21E
C6651	B C 22E
C6652	B C 22E
C6653	B C 21E
C6654	A D 21D
C7001	A D 9B
C7002	B C 11B
C7003	A D 7A
C7004	B C 8A
C7005	B C 11B
C7006	B C 11B
C7007	A D 13B
C7008	B C 13B
C7009	A D 12C
C7010	A D 11B
C7011	A D 13B
C7012	B C 11B
C7013	B C 10B
C7014	B C 6B
C7015	A D 13B
C7206	A D 19L
CONNECTOR	
CN1	A D 14O
CN501	A D 22I
CN2001	A D 9O
CN2002	A D 19L
CN3001	A D 7L
CN3002	A D 7P
CN3003	A D 7N
CN3004	A D 9F
CN3005	A D 3D
CN3007	A D 8P
CN5001	A D 1O
CN6701	A D 21J
CN7001	A D 2C
CN7101	A D 21B
CN7102	A D 20M
CN7103	A D 20G
DIODE	
D1	A D 18P
D2	A D 17P
D3	B C 9J
D4	A D 8N
D5	A D 7M
D6	B C 9J
D2201	A D 17N
D2202	A D 15K
D3001	A D 12H
D3002	A D 13G
D3004	A D 5F
D3005	A D 5E
D3006	A D 4D
D3007	B C 14C
D3008	A D 5N
D3010	A D 14E
D3013	B C 10P
D4003	B C 14F
D5001	B C 3N
D5101	A D 1M
D5102	A D 2L
D5103	A D 4K
D5201	A D 1J
D5202	A D 2I
D5203	A D 2I
D5204	A D 3I
D5205	A D 3I
D5206	A D 2I
D5207	A D 2I
D5209	A D 3H
D5210	A D 4J
D5211	A D 2I
D5212	A D 2H
D5214	A D 3I
D5301	A D 2I
D5302	B C 3E
D5303	A D 2E
D5304	B C 2E
D5307	A D 2F
D5308	A D 3D
D5309	A D 1E
D5310	A D 1E
D5311	A D 20L
D5312	B C 4F
D5315	A D 4H
D6002	A D 21L
D6551	A D 21L
D6650	B C 21F
D7001	A D 14B
D7002	A D 8A
D7003	A D 10B
D7004	A D 10B
D7005	A D 10B
D7006	A D 8B
D7007	A D 10B
D7008	A D 16A
D7009	A D 16A
IC	
IC1	B C 12M
IC2	B C 8K
IC501	B C 19G
IC502	A D 19E
IC2201	A D 14K
IC3001	B C 11E
IC3002	A D 5M
IC3003	B C 14D
IC3004	B C 16B
IC5301	A D 4E
IC6601	A D 20I
IC6650	B C 22E
IC7001	B C 12B
IC7002	B C 6C
IC7003	A D 8A
JACK	
J1	A D 20P
J2	A D 21P
J3	A D 11P
J4	A D 12P
J5	A D 13P
J7101	A D 20A
J7104	A D 19O
J7105	A D 5D
COIL	
L1	A D 16N
L2	A D 12O
L3	A D 7M
L4	A D 10L
L5	A D 11K
L11	A D 11M
L13	A D 9K
L15	A D 7L
L16	A D 8M
L18	A D 7L
L19	A D 7K
L20	A D 11O
L24	A D 11N
L27	A D 10K
L28	A D 11N
L201	A D 11G
L203	A D 12G
L401	A D 16O
L402	A D 16O
L501	A D 20F
L502	A D 17F
L503	A D 18F
L504	A D 20F
L901	A D 19N
L2001	A D 16M
L2251	A D 15M
L4001	A D 6N
L5201	A D 3G
L5202	A D 2F
L5301	A D 4D
L6001	A D 21N
L6003	A D 21O
L6004	A D 21K
L6032	A D 22K
L6050	A D 21N
L7201	A D 19L
TRANSISTOR	
Q1	B C 14N
Q2	B C 15N
Q3	B C 14O
Q4	B C 14O
Q5	B C 8M
Q7	B C 8L
Q8	B C 8L
Q9	B C 8L
Q10	B C 10K
Q11	B C 10K
Q12	B C 10K
Q13	B C 11J
Q16	B C 11O
Q17	B C 10O
Q18	B C 10N
Q21	B C 10L
Q23	B C 10M
Q25	B C 10L
Q26	B C 10K
Q27	B C 10K
Q28	B C 9N
Q32	B C 9M
Q33	B C 8K
Q38	B C 10N
Q45	B C 9N
Q201	B C 11G
Q401	B C 15O
Q402	B C 16O
Q403	B C 17O
Q404	B C 16N
Q405	B C 17O
Q901	B C 20N
Q903	B C 18N
Q904	B C 19N
Q2001	B C 13O
Q2002	B C 13O
Q2003	B C 12O
Q2004	B C 13O
Q2005	B C 14O
Q2006	B C 9O
Q2051	B C 7O
Q2052	B C 8P
Q2053	B C 8P
Q2054	B C 8P
Q2055	B C 9P
Q2061	B C 6K
Q2062	B C 6J
Q2063	B C 7J
Q2251	B C 16M
Q3001	A D 4I
Q3002	A D 19I
Q3003	B C 5N
Q3004	B C 4D
Q3005	B C 16C
Q4001	B C 14C
Q4002	B C 5F
Q4003	B C 9E
Q4004	B C 9E
Q5101	A D 2L
Q5102	A D 4M
Q5301	A D 2F
Q5302	A D 2E
Q5303	B C 2D
Q5304	A D 3E
Q5305	B C 3E
Q5306	B C 4F
Q5308	B C 4G
Q5311	B C 3F
Q5312	A D 1F
Q5313	B C 4F
Q5314	B C 4F
Q5315	A D 3H
Q5316	B C 3G
Q5317	B C 3F
Q5318	B C 3E
Q5319	B C 1E
Q5321	A D 2E
Q6030	B C 22J
Q6031	B C 22J
Q6501	B C 19K
Q6502	B C 20K
Q6551	A D 20K
Q7001	B C 6C
Q7002	B C 6C
Q7003	B C 5C
Q7004	B C 5C
Q7005	B C 5C
Q7151	B C 18P
Q7152	B C 18O
Q7201	A D 19M
RESISTOR	
R1	B C 12N
R2	B C 12O
R3	B C 11O
R4	B C 9J
R5	B C 10M
R6	B C 11M
R7	B C 11L
R8	B C 11J
R9	B C 11J
R12	B C 8M
R21	B C 16O
R22	B C 16N
R23	B C 8L
R24	B C 8M
R25	B C 8L
R26	B C 8L
R27	B C 8L
R28	B C 8L
R29	B C 8L
R30	B C 7K
R31	B C 7K
R32	B C 8K
R33	B C 11O
R34	B C 11O
R35	B C 11O
R36	B C 11J
R37	B C 11K
R38	B C 11K
R39	B C 11K
R41	B C 10K
R42	B C 10K
R43	B C 10K
R44	B C 10K
R45	B C 10K
R46	B C 10L
R48	B C 10L
R49	B C 10M
R54	B C 10N
R62	B C 10N
R66	B C 9M
R67	B C 10L
R68	B C 8K
R69	B C 10M
R75	B C 10N
R76	B C 9J
R77	B C 9P
R78	B C 12K
R79	B C 12K
R90	B C 10N
R92	B C 10N
R93	B C 10N
R104	B C 10O
R110	B C 9N
R111	A D 9L
R112	B C 9N
R118	B C 12K
R120	B C 14P
R201	B C 12F
R202	B C 11G
R203	B C 10G
R204	B C 10G
R205	B C 11G
R206	B C 11G
R207	B C 10G
R401	B C 15O
R402	B C 16O
R403	B C 16O
R404	B C 16O
R405	B C 16O
R406	B C 16O
R407	B C 16N
R408	B C 16O
R501	B C 20G
R502	B C 20G
R503	B C 17F
R504	B C 19E
R505	B C 19E
R506	B C 19D
R507	B C 20D
R508	B C 19D
R509	B C 19D
R510	B C 19E
R511	B C 20D
R512	B C 20D
R513	B C 20D
R514	B C 20E
R515	B C 20E
R522	B C 18H
R523	B C 18H
R524	B C 17G
R525	B C 19H
R901	B C 21P
R902	B C 21P
R904	A D 20O
R905	B C 20N
R911	B C 20P
R912	B C 21B
R913	B C 10P
R914	B C 12P
R915	B C 12P
R916	B C 13P
R917	B C 14P
R918	B C 18N
R919	A D 19N
R920	B C 18N
R921	B C 18N
R922	A D 19N
R924	B C 20G
R925	B C 20G
R926	B C 12P
R927	B C 11P
R2001	B C 15J
R2002	B C 15J
R2003	B C 15K
R2004	B C 15K
R2005	B C 13L
R2006	B C 13L
R2007	B C 14K
R2008	B C 13L
R2009	B C 13L
R2010	B C 14L
R2011	A D 15M
R2012	B C 16M
R2013	B C 13M
R2014	B C 13O
R2015	B C 13O
R2016	B C 13O
R2017	B C 13O
R2018	B C 12O
R2019	B C 12O
R2020	B C 13O
R2021	B C 13N
R2022	B C 9P
R2023	B C 9P
R2051	B C 7O
R2052	B C 7O
R2053	B C 7O
R2054	B C 7O
R2055	B C 7O
R2056	A D 9O
R2057	B C 8P
R2058	B C 8P
R2059	B C 8P
R2060	B C 8P
R2061	B C 6K
R2062	B C 6J
R2063	B C 6K
R2064	B C 6J
R2065	B C 6J
R2201	B C 17N
R2202	B C 13K
R2203	B C 13K
R2204	B C 13K
R2205	B C 15K
R2206	B C 15K
R2207	B C 15K
R2213	B C 14K
R2215	B C 14L
R2217	B C 14L
R2218	B C 15L
R2219	B C 15L
R2220	B C 15M
R2222	B C 14L
R2223	B C 14L
R2224	B C 14L
R2225	B C 14L
R2232	B C 17N
R2233	B C 15K
R2234	B C 16L
R2235	A D 14L
R2236	B C 14L
R2237	A D 16K
R2251	A D 16N
R3003	B C 12D
R3004	B C 8D
R3005	B C 12D
R3006	B C 14C
R3007	B C 12D
R3008	A D 12C
R3013	B C 15C
R3014	B C 13D
R3015	B C 14C
R3017	B C 13D
R3018	B C 12E
R3019	B C 15D
R3020	B C 15D
R3021	B C 13D
R3022	B C 13D
R3026	B C 14E
R3027	B C 14E
R3028	B C 13E
R3030	B C 14F
R3031	B C 14E
R3032	B C 13E
R3035	B C 13F
R3042	B C 13G
R3043	B C 12G
R3044	B C 13G
R3045	B C 13G
R3056	B C 11F
R3057	B C 10F
R3058	B C 10F
R3059	B C 8G
R3060	B C 10F
R3078	B C 8E
R3080	B C 9E
R3081	B C 8E
R3082	B C 9D
R3083	B C 9D
R3085	B C 7E
R3086	B C 7D
R3087	B C 8D
R3088	B C 9D
R3089	B C 9D
R3090	B C 10D
R3091	B C 10D
R3092	B C 10D
R3093	B C 10D
R3094	B C 9D
R3095	B C 10D
R3096	B C 10D
R3097	B C 10D
R3098	B C 11D
R3099	B C 9D
R3100	B C 11D
R3201	B C 5M
R3202	B C 5N
R3203	B C 5N
R3204	A D 6N
R3205	A D 6F
R3206	B C 9F
R3207	B C 9F
R3208	B C 9F
R3209	A D 12H
R3210	A D 8F
R3211	B C 16D
R3212	B C 16E
R3213	B C 16E
R3214	B C 9G
R3215	B C 8G
R3216	A D 6H
R3217	B C 13G
R3218	B C 6F
R3219	A D 16D
R3220	B C 14D
R3221	B C 5M
R3222	B C 14D
R3223	B C 12F
R3224	B C 12F
R3226	B C 16B
R3227	B C 16B
R3232	B C 4D
R3233	B C 4D
R3234	A D 4G
R3235	A D 8P
R3236	B C 15C
R3237	B C 14C
R3238	B C 14C
R3240	B C 2C
R3241	B C 2C
R3242	B C 12F
R3243	A D 15H
R3244	B C 16D
R4001	B C 13F
R4002	B C 11G
R4003	B C 10F
R4004	B C 15D
R4006	B C 13E
R4010	B C 9E
R4011	B C 9E
R4012	B C 8E
R4018	B C 10F
R4019	B C 9G
R4020	B C 10G
R4021	B C 9G
R4022	B C 5F
R4024	A D 8G
R4025	B C 11H
R5001	A D 3P
R5101	A D 1L
R5102	A D 1M
R5103	A D 2M
R5104	A D 1N
R5106	A D 2L
R5107	A D 3L
R5108	B C 4L
R5109	B C 3M
R5110	B C 2L
R5113	B C 2M
R5301	B C 4I
R5302	B C 4I
R5303	B C 4H
R5304	B C 4H
R5305	B C 2E
R5306	B C 2E
R5307	B C 2G
R5308	B C 2E
R5309	B C 3E
R5310	B C 3E
R5311	B C 3D
R5312	B C 4E
R5313	B C 4F
R5314	B C 3F
R5315	B C 4F
R5316	B C 4E
R5317	A D 4H
R5318	A D 1G
R5320	B C 4H
R5321	A D 4G
R5324	B C 2E
R5325	A D 2E
R5326	A D 1F
R5327	B C 1F
R5328	B C 1F
R5330	B C 1I
R5332	A D 3G
R5333	A D 2C
R5334	A D 1C
R5335	B C 3H
R5336	B C 4H
R5337	B C 3H
R5338	B C 3F
R5339	B C 3E
R5340	B C 4E
R5341	B C 4F
R5342	B C 3F
R5343	B C 3D
R6020	B C 21N
R6021	B C 21N
R6023	B C 21M
R6030	B C 22I
R6031	B C 22L
R6032	B C 21L
R6033	B C 20K
R6034	B C 22I
R6050	A D 21O
R6051	A D 21O
R6053	B C 19P
R6508	A D 20J
R6509	B C 20K
R6510	B C 20K
R6511	B C 20K
R6551	B C 20L
R6552	B C 20L
R6607	B C 20H
R6608	B C 21I
R6609	B C 21H
R6628	B C 21H
R6629	B C 21H
R6650	B C 22F
R6651	B C 22E
R6652	B C 22E
R6653	B C 21E
R6654	A D 21E
R6655	B C 21E
R6656	B C 21E
R6657	B C 21F
R6658	B C 21E
R6659	B C 21E
R6660	B C 22E
R6661	B C 21E
R7001	B C 10B
R7002	B C 11B
R7003	B C 11B
R7004	B C 11B
R7005	B C 11B
R7006	B C 11B
R7007	B C 11C
R7008	B C 13C
R7009	A D 14B
R7010	B C 8A
R7011	B C 10B
R7012	A D 7A
R7013	B C 10B
R7014	B C 11B
R7015	B C 5A
R7016	B C 2B
R7017	B C 16A
R7018	B C 15A
R7019	B C 6B
R7020	B C 17A
R7021	B C 17A
R7022	B C 7A
R7023	B C 5A
R7024	B C 3B
R7025	B C 5A
R7026	A D 8B
R7030	B C 17A
R7031	B C 6A
R7032	B C 3A
R7033	B C 2B
R7034	B C 1B
R7035	B C 2B
R7036	B C 2B
R7037	B C 2B
R7040	B C 2C
R7041	B C 2C
R7042	B C 2B
R7043	B C 2C
R7044	B C 5C
R7151	B C 18P
R7152	B C 19O
R7155	B C 6D
R7156	B C 18O
R7202	B C 19L
R7203	B C 19L
R7204	A D 19M
VR6601	A D 19K
SWITCH	
S3001	A D 18C
S3002	A D 6F
S6050	A D 18P
S7001	A D 22B
S7002	A D 18B
S7004	A D 7B
S7006	A D 6B
S7008	A D 5B
S7010	A D 4B
S7011	A D 4B
S7012	A D 3B
S7013	A D 2B
S7014	A D 2B
S7015	A D 1B
S7016	A D 17B
TEST POINT	
TP106	A D 6P
TP111	A D 5P
TP2253	A D 6P
TP4001	A D 6P
TP7001	A D 3A
TPGND	A D 4A
OTHER	
BT3001	A D 3C
CF6031	A D 22K
CP501	A D 21G
CP4001	A D 4G
CP5301	A D 4E
CP5302	A D 4G
DI7001	A D 12A
DI7002	A D 12A
F5001	A D 2N
FC5001	A D 2P
FC5002	A D 2N
FW3001	A D 21N
FW3002	A D 19M
FW3003	A D 20M
FW7104	A D 18O
FW7105	A D 6E
FW7106	A D 4C
K2251	B C 15N
K2252	B C 15N
K2253	B C 15N
K5101	A D 2M
K5102	A D 1N
K5301	A D 3G
LF5002	A D 4O
PC3001	A D 16F
PC3002	A D 8G
PC5101	A D 4L
SG5001	A D 1P
T2051	A D 7O
T2052	A D 6K
T5001	A D 1K
TU6001	A D 22P
VA5001	A D 1P
VA5002	A D 3P
X1	A D 11L
X2	A D 11L
X3001	A D 13F
X3002	A D 13F

4.13 2D DIGITAL AND DEMODULATOR CIRCUIT BOARDS

＜05＞2D DIGITAL
LPB10090-001B

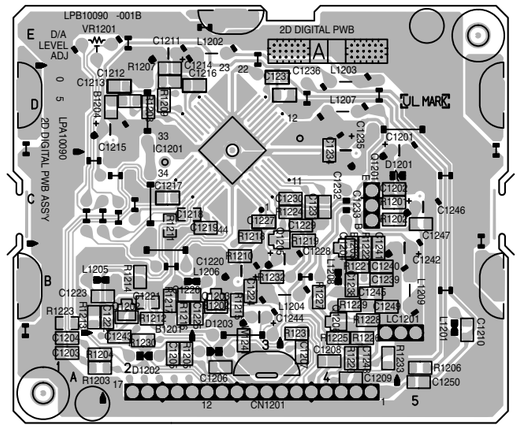

COMPONENT PARTS LOCATION GUIDE
＜2D DIGITAL ＞

REF.NO.	LOCATION
CAPACITOR	
C1201	A D 5D
C1202	B C 5C
C1203	B C 1A
C1204	B C 1A
C1205	B C 2A
C1206	B C 3A
C1207	B C 4A
C1208	B C 4A
C1209	B C 4A
C1210	B C 6B
C1211	A D 2E
C1212	B C 2D
C1213	B C 2D
C1214	B C 2D
C1215	A D 2D
C1216	B C 3D
C1217	B C 2C
C1218	B C 2C
C1219	B C 3C
C1220	A D 3B
C1221	B C 2B
C1222	B C 2B
C1223	B C 2B
C1224	B C 3B
C1225	B C 3B
C1226	B C 2B
C1227	B C 3C
C1228	A D 3B
C1229	B C 4C
C1230	B C 4C
C1231	B C 4C
C1232	B C 4C
C1233	A D 4C
C1234	B C 4D
C1235	A D 4D
C1236	B C 4D
C1237	B C 3D
C1238	B C 4B
C1239	B C 5B
C1240	B C 5B
C1241	B C 5B
C1242	A D 5B
C1243	B C 2A
C1244	A D 3B
C1245	B C 5B
C1246	A D 5C
C1247	B C 5C
C1248	B C 4A
C1249	B C 5B
C1250	B C 5A
CONNECTOR	
CN1201	A D 5A
DIODE	
D1201	A D 5C
D1202	A D 2A
D1203	A D 3A
IC	
IC1201	B C 3D
COIL	
L1201	A D 5A
L1202	A D 3E
L1203	A D 4D
L1204	A D 4B
L1205	A D 2B
L1206	A D 3B
L1207	A D 4D
L1208	A D 4B
L1209	A D 5B
TRANSISTOR	
Q1201	A D 5C
Q1202	B C 2B
Q1203	B C 3B
Q1204	B C 4B
Q1205	B C 3C
Q1206	B C 4B
RESISTOR	
R1201	B C 5C
R1202	B C 5C
R1203	B C 1A
R1204	B C 1A
R1205	B C 2A
R1206	B C 5A
R1207	B C 2D
R1208	B C 2D
R1209	B C 2D
R1210	B C 3B
R1211	B C 2C
R1212	B C 2B
R1213	B C 1B
R1214	B C 2B
R1215	B C 3B
R1216	B C 2B
R1217	B C 2B
R1218	B C 3C
R1219	B C 4C
R1220	B C 4A
R1221	B C 4B
R1222	B C 4B
R1223	B C 1B
R1224	B C 4C
R1225	B C 4A
R1226	B C 4A
R1227	B C 4B
R1228	B C 4B
R1229	B C 4B
R1230	B C 2A
R1231	B C 4B
R1232	B C 3B
R1233	B C 5A
VR1201	A D 1E
OTHER	
LC1201	A D 5B

＜14＞DEMODULATOR
PB11076

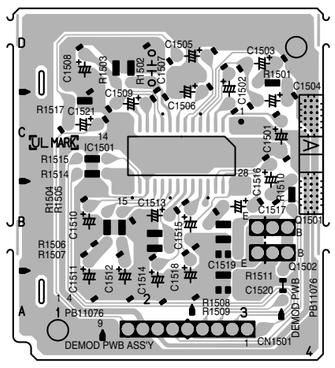

COMPONENT PARTS LOCATION GUIDE
＜DEMODULATOR ＞

REF.NO.	LOCATION
CAPACITOR	
C1501	A D 4C
C1502	A D 3D
C1503	A D 4D
C1504	A D 4C
C1505	A D 3D
C1506	A D 3C
C1507	A D 2C
C1508	A D 1D
C1509	A D 2C
C1510	A D 1B
C1511	A D 1A
C1512	A D 2A
C1513	A D 2B
C1514	A D 2A
C1515	A D 3B
C1516	A D 3C
C1517	A D 3B
C1518	A D 3A
C1519	A D 3B
C1520	A D 3A
C1521	A D 2C
CONNECTOR	
CN1501	A D 3A
IC	
IC1501	B C 2C
TRANSISTOR	
Q1501	A D 3B
Q1502	A D 3B
RESISTOR	
R1501	A D 4C
R1502	A D 2C
R1503	A D 2C
R1504	A D 2B
R1505	A D 2B
R1506	A D 2B
R1507	A D 2B
R1508	A D 3B
R1509	A D 3B
R1510	A D 4B
R1511	A D 3A
R1514	A D 2B
R1515

4.14 REMOTE CONTROLLER SCHEMATIC DIAGRAM

NOTES:
1. All parts shown in this schematic are critical for safety.
2. This schematic is only for reference.
   Avoid replacing individual parts.
   Replace the entire unit only.

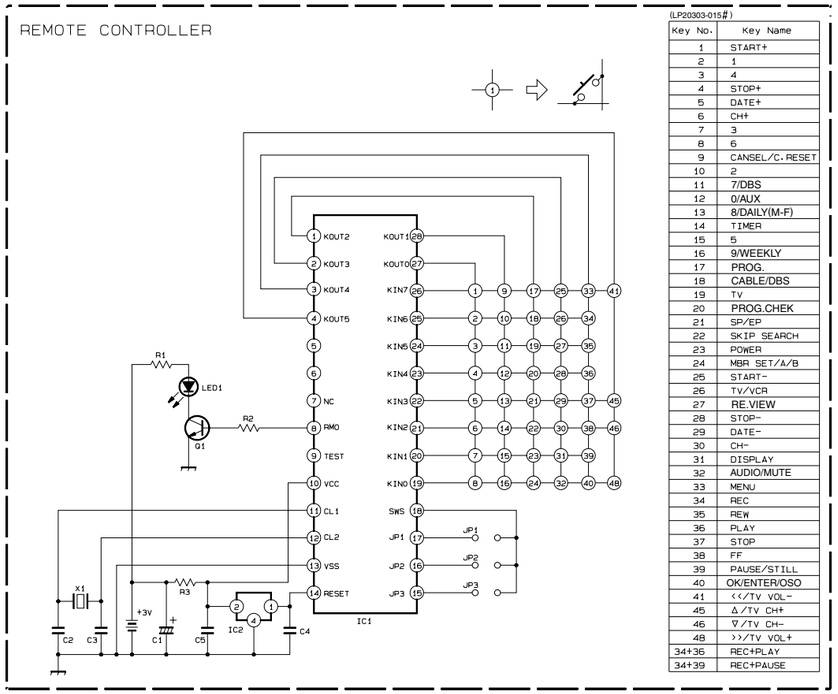

(LP20303-015#)

Key No.	Key Name
1	START+
2	1
3	4
4	STOP+
5	DATE+
6	CH+
7	3
8	6
9	CANSEL/C.RESET
10	2
11	7/DBS
12	0/AUX
13	8/DAILY(M-F)
14	TIMER
15	5
16	9/WEEKLY
17	PROG.
18	CABLE/DBS
19	TV
20	PROG.CHEK
21	SP/EP
22	SKIP SEARCH
23	POWER
24	MBR SET/A/B
25	START-
26	TV/VCR
27	RE.VIEW
28	STOP-
29	DATE-
30	CH-
31	DISPLAY
32	AUDIO/MUTE
33	MENU
34	REC
35	REW
36	PLAY
37	STOP
38	FF
39	PAUSE/STILL
40	OK/ENTER/OSO
41	<<<TV VOL-
45	Δ/TV CH+
46	∇/TV CH-
48	>>>TV VOL+
34+36	REC+PLAY
34+39	REC+PAUSE

4.15 FDP GRID ASSIGNMENT AND ANODE CONNECTION

[A] (FDP with audio level indicator)

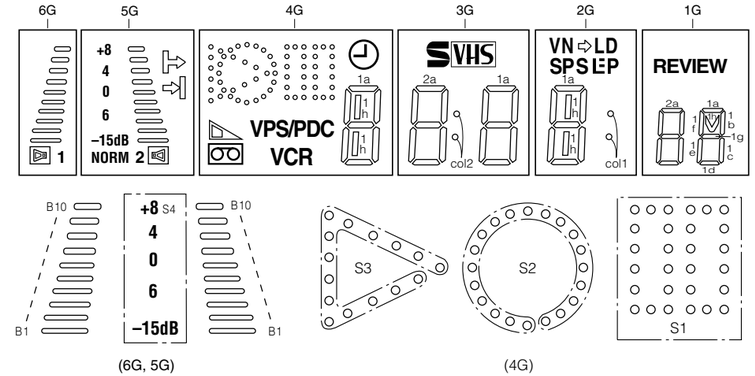

[B] (FDP without audio level indicator)

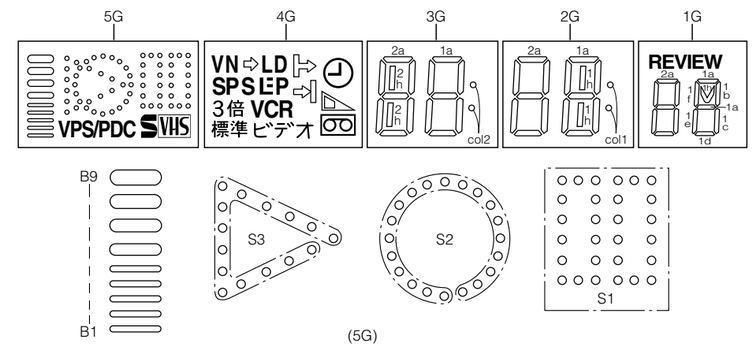

ANODE CONNECTION [A]

	6G	5G	4G	3G	2G	1G
P 1	—	⇨	S2	1a	1a	1a
P 2	—	⇨	S1	1b	1b	1b
P 3	—	S4	S3	1f	1f	1f
P 4	—	NORM	VPS/PDC	1g	1g	1g
P 5	1	2	◷	1c	1c	1c
P 6	▷	◁	◺	1e	1e	1e
P 7	B10	B10	∞	1d	1d	1d
P 8	B9	B9	VCR	col2	1h	1h
P 9	B8	B8	1a	2a	col1	2a
P10	B7	B7	1b	2b	⇨	2b
P11	B6	B6	1f	2f	VN	2f
P12	B5	B5	1g	2g	LD	2g
P13	B4	B4	1c	2c	SP	2c
P14	B3	B3	1e	2e	S (SEP)	2e
P15	B2	B2	1d	2d	= (SEP)	2d
P16	B1	B1	1h	SVHS	LP (SEP)	REVIEW

ANODE CONNECTION [B]

	5G	4G	3G	2G	1G
P 1	S2	⇨	1a	1a	1a
P 2	S1	⇨	1b	1b	1b
P 3	S3	3倍	1f	1f	1f
P 4	VPS/PDC	標準	1g	1g	1g
P 5	SVHS	◷	1c	1c	1c
P 6	—	◺	1e	1e	1e
P 7	—	∞	1d	1d	1d
P 8	B9	VCR	col2	1h	1h
P 9	B8	ビデオ	2a	2a	2a
P10	B7	⇨	2b	2b	2b
P11	B6	VN	2f	2f	2f
P12	B5	LD	2g	2g	2g
P13	B4	SP	2c	2c	2c
P14	B3	S (SEP)	2e	2e	2e
P15	B2	= (SEP)	2d	2d	2d
P16	B1	LP (SEP)	2h	col1	REVIEW

4.16 WAVEFORMS

< SYSCON >

WF1 CN3001-2 CAP_FG

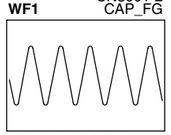

REC/PB 2.9 Vp-p
50 mV/0.5 msec/DIV

WF2 CN3002-4 D.PG

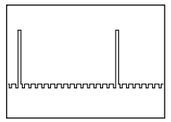

REC/PB 4.5 Vp-p
0.1 V/10 msec/DIV

WF3 CN3002-5 D.FG

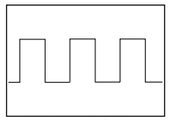

REC/PB 4.2 Vp-p
0.1 V/1 msec/DIV

WF4 TP4001 CTL.P

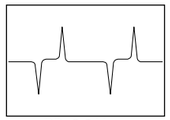

PB 3.0 Vp-p
0.1 V/10 msec/DIV

WF5 IC3001-74 CTL_+

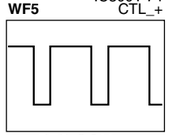

REC 3.6 Vp-p
1.0 V/10 msec/DIV

WF6 IC3001-49 CVIN

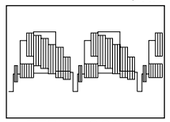

REC/PB 2.2 Vp-p
50 mV/20 µsec/DIV

WF7 IC3001-47 VIDEO_OUT

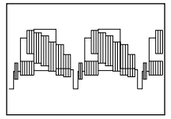

REC/PB 2.2 Vp-p
50 mV/20 µsec/DIV

< S-SUB >

WF1 IC501-1

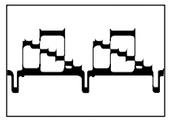

REC 1.0 Vp-p
20 mV/20 µsec/DIV

WF2 IC501-3

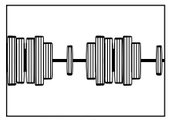

REC 0.7 Vp-p
20 mV/20 µsec/DIV

WF3 IC501-14

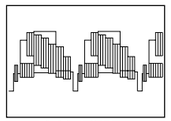

REC 1.2 Vp-p
50 mV/20 µsec/DIV

WF4 IC501-15

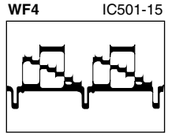

REC/PB 2.2 Vp-p
50 mV/20 µsec/DIV

WF5-1 IC501-17

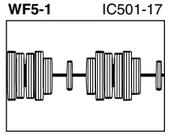

REC 1.4 Vp-p
50 mV/20 µsec/DIV

WF5-2 IC501-17

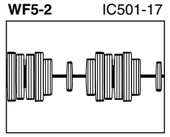

PB 1.2 Vp-p
50 mV/20 µsec/DIV

WF6 IC501-19

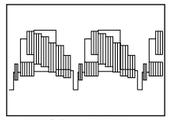

REC/PB 2.2 Vp-p
50 mV/20 µsec/DIV

WF7 IC501-29

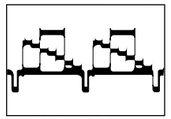

REC/PB 0.52 Vp-p
20 mV/20 µsec/DIV

WF8 IC501-31

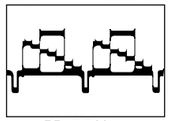

PB 0.5 Vp-p
20 mV/20 µsec/DIV

WF9 IC501-33

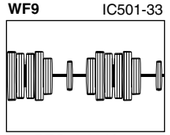

REC 0.68 Vp-p
20 mV/20 µsec/DIV

WF10-1 IC501-42

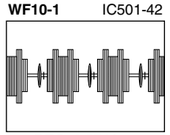

REC 0.57 Vp-p
20 mV/20 µsec/DIV

WF10-2 IC501-42

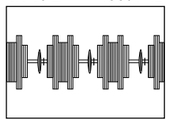

PB 0.64 Vp-p
20 mV/20 µsec/DIV

WF11 IC501-43

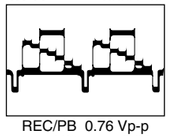

REC/PB 0.76 Vp-p
20 mV/20 µsec/DIV

WF12-1 IC501-45

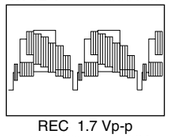

REC 1.7 Vp-p
50 mV/20 µsec/DIV

WF12-2 IC501-45

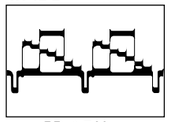

PB 1.7 Vp-p
50 mV/20 µsec/DIV

WF13 IC501-47

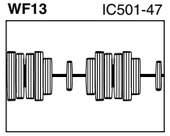

PB 1.0 Vp-p
50 mV/20 µsec/DIV

WF14 IC501-48

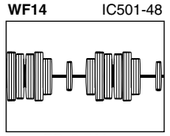

PB 0.7 Vp-p
20 mV/20 µsec/DIV

WF15 IC501-56

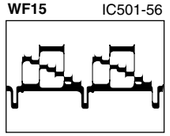

PB 2.1 Vp-p
50 mV/20 µsec/DIV

< VIDEO >

WF1 IC1-27

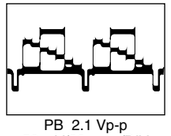

PB 2.1 Vp-p
50 mV/20 µsec/DIV

WF2 IC1-30

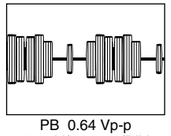

PB 0.64 Vp-p
20 mV/20 µsec/DIV

WF3 IC1-1

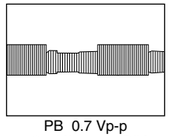

PB 0.7 Vp-p
50 mV/5 msec/DIV

WF4 TP106 PB.FM

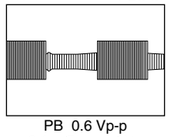

PB 0.6 Vp-p
0.1 V/5 msec/DIV

WF5 TP111 D.FF

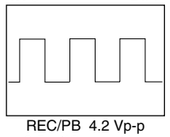

REC/PB 4.2 Vp-p
0.5 V/10 msec/DIV

WF6 IC1-105

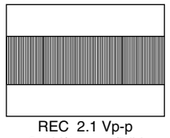

REC 2.1 Vp-p
0.1 V/1 msec/DIV

WF7-1 IC1-14

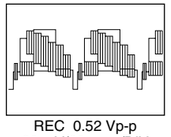

REC 0.52 Vp-p
20 mV/20 µsec/DIV

WF7-2 IC1-14

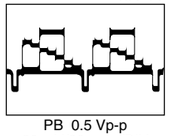

PB 0.5 Vp-p
20 mV/20 µsec/DIV

WF8 IC1-13

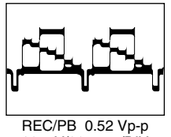

REC/PB 0.52 Vp-p
20 mV/20 µsec/DIV

WF9 IC1-11

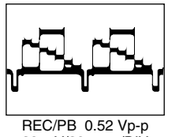

REC/PB 0.52 Vp-p
20 mV/20 µsec/DIV

WF10 IC1-16

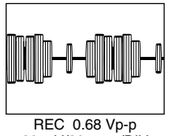

REC 0.68 Vp-p
20 mV/20 µsec/DIV

< AUDIO >

WF1 IC1-80

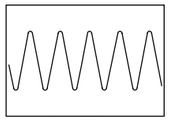

REC 0.2 Vp-p
5 mV/0.5 msec/DIV

WF2 IC1-62

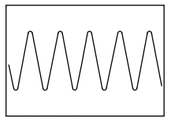

REC/PB 0.9 Vp-p
20 mV/0.5 msec/DIV

WF3 IC1-52

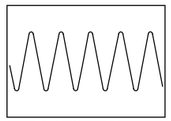

REC 0.11 Vp-p
2 mV/0.5 msec/DIV

WF4 IC1-48

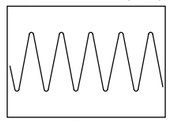

PB 0.72 Vp-p
20 mV/0.5 msec/DIV

WF5 IC1-119

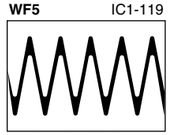

REC 0.8 Vp-p
20 mV/0.5 msec/DIV

WF6 IC1-97

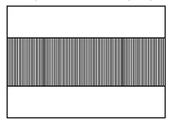

REC 2.5 Vp-p
0.1 V/5 msec/DIV

WF7 TP2253 A.PB.FM

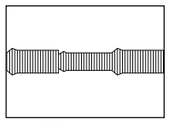

PB 0.8 Vp-p
50 mV/5 msec/DIV

4.17 VOLTAGE CHARTS

<MAIN>

MODE PIN NO.	REC	PLAY
IC1		
1	1.6	2.1
2	2.8	2.8
3	2.6	2.6
4	1.9	1.5
5	1.9	1.5
6	2.4	2.1
7	1.5	0.8
8	0	0
9	2.7	3.1
10	2.4	2.4
11	3.1	3.1
12	2.8	2.4
13	3.1	3.1
14	3.6	2.4
15	0	0
16	2.8	2.8
17	1.5	1.5
18	2.8	2.8
19	0.9	1.1
20	2.8	2.8
21	1.5	1.9
22	2.8	2.8
23	3.1	2.9
24	5.0	5.0
25	0.4	0.4
26	0	0
27	1.3	2.3
28	2.8	2.4
29	1.9	1.9
30	2.1	2.1
31	0	0
32	2.4	2.4
33	5.0	5.0
34	2.7	2.4
35	5.0	5.0
36	2.4	2.4
37	2.3	2.8
38	0.2	0.3
39	1.3	1.2
40	1.7	1.7
41	2.7	2.7
42	2.2	2.2
43	0	0
44	2.1	2.1
45	3.4	3.4
46	3.8	3.8
47	2.9	2.9
48	2.6	2.6
49	5.0	5.0
50	2.5	2.5
51	2.8	2.8
52	2.3	2.3
53	2.3	2.3
54	2.4	2.4
55	2.2	2.2
56	0.5	0.5
57	2.3	2.3
58	8.8	8.8
59	4.5	4.5
60	4.5	4.5
61	4.6	4.5
62	4.5	4.4
63	2.3	2.3
64	2.3	2.3
65	0.7	0.7
66	0.7	0.7
67	3.3	3.3
68	3.3	3.3
69	2.3	2.3
70	0	0
71	0.2	0.2
72	0.2	0.2
73	0.2	0.2
74	2.3	2.3
75	2.7	2.7
76	0	0
77	2.7	2.7
78	0.2	0.2
79	0.2	0.2
80	0.2	0.2
81	2.3	2.3
82	0.7	0.8
83	0	0
84	2.3	2.3
85	2.3	2.3
86	2.3	2.3
87	1.7	1.8
88	2.3	2.3
89	2.3	2.3
90	2.3	2.3
91	0.1	0.1
92	0	0
93	0	2.4
94	0	2.0
95	0	0
96	2.5	2.3
97	2.7	2.3
98	2.6	2.3
99	5.0	5.0
100	5.0	5.0

MODE PIN NO.	REC	PLAY
101	0	0
102	0	0
103	0	0
104	2.3	2.3
105	2.5	2.3
106	2.3	2.3
107	5.0	5.0
108	0	0
109	0	0
110	0	0
111	0	2.7
112	2.5	2.5
113	0.5	0.5
114	0	0
115	2.6	2.6
116	2.5	2.5
117	2.5	2.5
118	0	0
119	2.5	2.5
120	0	0
IC501		
1	2.8	2.8
2	0	0
3	2.1	2.1
4	4.9	4.9
5	2.8	2.8
6	0	0
7	2.8	2.8
8	0.1	0
9	2.8	2.8
10	0	0
11	2.1	2.1
12	2.8	2.8
13	0	0
14	2.8	2.8
15	2.3	2.3
16	2.7	2.7
17	2.4	2.4
18	0	0
19	2.3	2.3
20	0	0
21	3.5	3.5
22	2.7	2.7
23	2.9	2.1
24	2.8	2.8
25	2.8	2.8
26	4.9	4.9
27	3.0	3.0
28	2.4	2.3
29	2.5	2.3
30	4.9	4.9
31	2.7	3.0
32	0.1	4.9
33	2.8	2.8
34	2.8	2.8
35	2.8	2.8
36	2.8	2.8
37	0	0
38	3.7	3.7
39	3.3	3.3
40	2.8	2.8
41	2.6	2.6
42	2.8	2.8
43	3.3	3.3
44	2.0	1.9
45	2.0	2.0
46	4.9	4.9
47	0.5	2.4
48	2.8	2.8
49	0	0
50	2.8	2.8
51	2.9	2.9
52	2.4	2.4
53	3.1	3.1
54	2.3	2.4
55	1.9	1.1
56	2.5	3.4
IC502		
1	2.0	2.0
2	1.4	4.9
3	3.3	3.3
4	3.4	3.4
5	4.9	4.9
6	2.2	2.2
7	2.0	2.0
8	4.9	4.9
9	1.5	1.5
10	2.9	2.8
11	2.9	2.8
12	2.9	2.8
13	0	0
14	2.8	2.8
15	2.8	2.8
16	1.9	2.0
17	1.9	2.0
18	1.9	2.0
IC3001		
1	-	-
2	-	-
3	0.6	0.6
4	4.8	0

MODE PIN NO.	REC	PLAY
5	4.8	4.8
6	0	0
7	0	0
8	4.8	0
9	0	0
10	4.8	4.8
11	0	0
12	0	0
13	4.8	4.8
14	0	0
15	0	4.8
16	4.8	4.8
17	3.7	3.7
18	3.2	3.2
19	4.8	0
20	4.8	0
21	0.9	1.1
22	4.3	4.3
23	2.4	2.4
24	0	0
25	-	-
26	0	2.4
27	4.8	0
28	4.8	4.8
29	0	0
30	4.8	4.8
31	4.8	4.8
32	0	0
33	2.5	2.5
34	1.4	1.4
35	0	0
36	4.8	4.8
37	-	-
38	-	-
39	2.4	0
40	-	-
41	-	-
42	0	0
43	4.8	4.8
44	0	0
45	4.8	4.8
46	4.4	4.4
47	2.3	2.3
48	0	0
49	2.3	2.3
50	2.5	2.5
51	5.0	5.0
52	2.5	2.5
53	2.5	2.5
54	0	0
55	0	0
56	4.5	4.5
57	4.5	4.5
58	0	0
59	4.8	4.8
60	0	0
61	0	0
62	4.9	4.9
63	4.9	4.9
64	4.9	4.9
65	2.6	2.6
66	0.4	0.4
67	2.4	2.4
68	2.4	2.4
69	2.4	2.4
70	2.4	2.4
71	0	0
72	2.4	2.4
73	4.9	4.9
74	2.9	2.9
75	1.9	2.4
76	2.4	2.4
77	0	0
78	0	0
79	0	0
80	1.1	1.1
81	0	0
82	0	2.7
83	0	2.0
84	4.9	4.9
85	0	0
86	0	0
87	-	-
88	0	0
89	0	0
90	4.9	4.9
91	0	0
92	0	0
93	0	0
94	4.9	4.9
95	3.8	3.8
96	4.5	4.5
97	0.4	0.4
98	0.1	0.1
99	0	0
100	4.9	4.9
IC3002		
1	7.3	7.3
2	0.1	0.1
3	0	0
4	0.1	0.1

MODE PIN NO.	REC	PLAY
5	11.6	11.6
6	11.6	11.6
7	0	0
8	0	0
9	0	0
IC3003		
1	4.9	4.9
2	4.9	4.9
3	0	0
4	0	0
IC3004		
1	0	0
2	0	0
3	0	0
4	0	0
5	4.5	4.5
6	4.5	4.5
7	0	0
8	4.9	4.9
IC5301		
1	2.4	2.4
2	0	0
3	4.4	4.4
IC7001		
1	4.9	4.9
2	0	0
3	0	0
4	0	0
5	0.7	0.7
6	0.7	0.7
7	0	0
8	4.5	4.5
9	4.5	4.5
10	0	0
11	0	0
12	0	0
13	0	0
14	4.9	4.9
15	-	-
16	-	-
17	-	-
18	-	-
19	-	-
20	-	-
21	-	-
22	-	-
23	-	-
24	-	-
25	-	-
26	-	-
27	-27.4	-27.4
28	-	-
29	-	-
30	-	-
31	-	-
32	-	-
33	-	-
34	-	-
35	-	-
36	-	-
37	-	-
38	4.9	4.9
39	4.9	4.9
40	4.9	4.9
41	4.9	4.9
42	4.9	4.9
43	0	0
44	2.6	2.6
IC7003		
1	4.9	4.9
2	4.9	4.9
3	0	0
CN1		
1	0	0
2	0	0
3	0	0
4	0	0
5	2.4	2.4
6	2.4	2.4
7	2.4	2.4
8	2.4	2.4
9	2.7	2.4
10	2.7	2.4
11	2.7	2.4
12	0	0
13	0	0
CN501		
1	3.7	3.7
2	0	0
3	0.5	2.4
4	5.0	5.0
5	2.0	2.0
6	0.1	4.9
7	3.3	3.3
8	0	0
9	2.8	2.8
10	0	0
11	3.3	3.3
12	3.8	3.8
13	0	0
14	0	0

MODE PIN NO.	REC	PLAY
15	2.4	2.4
16	0	0
17	0	0
CN2001		
1	0.1	0.1
2	0	0
3	0	0
4	0	0
5	0	0
6	2.3	2.3
7	2.6	2.3
CN2002		
1	0	0
2	0	0
CN3001		
1	0	0
2	2.5	2.5
3	2.5	2.5
4	5.0	5.0
5	0	0
6	4.9	4.9
7	-	-
8	11.6	11.6
CN3002		
1	11.6	11.6
2	0	0
3	1.3	1.3
4	0.3	0.3
5	2.6	2.6
CN3003		
1	0.2	0.2
2	0.3	0.3
CN3004		
1	4.9	4.9
2	4.9	4.9
3	0	0
4	0	0
CN6701		
1	0	0
2	4.5	4.5
3	4.5	4.5
4	4.8	4.8
5	0	0
6	0	0
7	8.9	8.9
8	0	0
9	2.3	2.3
CN7001		
1	4.9	4.9
2	0	0
3	0	0
4	0	0
5	0	0
6	0	0
7	0	0
8	0	0
9	3.0	3.0
CN7103		
1	0	0
2	0	0
3	0	0
4	0	0
FW3001		
1	0	0
2	0	0
FW3002		
1	0	0
2	0	0

<2D DIGITAL>

MODE PIN NO.	REC	PLAY
IC1201	-	-
CN1201		
1	3.7	3.7
2	0	0
3	0.5	2.4
4	5.0	5.0
5	2.0	2.0
6	0.1	4.9
7	3.3	3.3
8	0	0
9	2.8	2.8
10	0	0
11	3.3	3.3
12	3.8	3.8
13	0	0
14	0	0
15	2.4	2.4
16	0	0
17	0	0

<DEMODULATOR>

MODE PIN NO.	REC	PLAY
IC1501	-	-
CN1501		
1	0	0
2	4.5	4.5
3	4.5	4.5
4	4.8	4.8

MODE PIN NO.	REC	PLAY
5	0	0
6	0	0
7	8.9	8.9
8	0	0
9	2.3	2.3

<S-JACK> [HR-S5900U/U(C)]

MODE PIN NO.	REC	PLAY
CN7108		
1	0	0
2	0	0
3	0	0
4	0	0

<ADV.JOG>

MODE PIN NO.	REC	PLAY
CN7004		
1	4.9	4.9
2	4.9	4.9
3	0	0
4	0	0
5	0	0
6	0	0
7	0	0
8	0	0
9	0	0

<R.PAUSE>

MODE PIN NO.	REC	PLAY
FW7104		
1	0	0
2	0	0

<C.BOX CTL>

MODE PIN NO.	REC	PLAY
FW7105		
1	0	0
2	0	0

4.18 CPU PIN FUNCTION

<SYSCON IC3001>

PIN No.	LABEL	IN/OUT	FUNCTION
1	SP FG	IN	DETECTION SIGNAL FOR SUPPLY REEL ROTATION/TAPE REMAIN
2	TU FG	IN	DETECTION SIGNAL FOR TAKE-UP REEL ROTATION/TAPE REMAIN
3	R.PAUSE IN/AV COMPULINK IN	IN	REMOTE PAUSE INPUT/NC
4	N.REC(H)	OUT	NORMAL AUDIO REC MODE CONTROL (REC: H)
5	RC IN	IN	REMOTE CONTROL DATA INPUT
6	TRICK[H]/M_TRICK[L]	-	NC
7	ET_PB[H]/HS_FR	-	NC
8	FULL.E.ON[H]/SEP_PB[H]	OUT	FULL ERASE HEAD ON: H/NC
9	S.CASSETTE	IN	DETECTION SIGNAL FOR SVHS CASSETTE (SVHS: H)
10	JSB	IN	INPUT FOR THE JOG SHUTTLE
11	LMC1	OUT	LOADING MOTOR DRIVE (1)
12	LMC2	OUT	LOADING MOTOR DRIVE (2)
13	RMO/R-Y_REV/BS_ANT_ON[H]	OUT	REMOTE CONTROLLER OUTPUT FOR CABLE BOX/NC/NC
14	POWER DET	IN	DETECTION SIGNAL FOR POWER DOWN OF AC POWER SUPPLY
15	CONV_CTL(H)/GR_ON[H]	OUT	RF CONVERTER ON/OFF (ON: H, OFF: L) /NC
16	CTL GAIN	OUT	CONTROL AMP OUT FREQUENCY RESPONSE SWITCHING
17	I2C_DATA_A/V	IN/OUT	SERIAL I/O DATA
18	I2C_CLK_A/V	OUT	SERIAL DATA TRANSFER CLOCK
19	SP_SHORT(H)/FLY_REC_ST[H]	OUT	MODE SELECT [HR-S3900U/U(C)] / FLY REC START: H [HR-S5900U/U(C)
20	EP_SHORT(H)/FLY_REC(H)	OUT	MODE SELECT [HR-S3900U/U(C)] / REC TIMING CONTROL (FLY ERASE ON: H) [HR-S5900U/U(C)
21	SIDE BIND GAIN	OUT	VOLTAGE CONTROL SIGNAL FOR VIDEO FREQUENCY RESPONSE
22	CH SW	OUT	CHANNEL SWITCHING SIGNAL
23	D.FF	OUT	ROTATION DETECTION SIGNAL FOR DRUM MOTOR/TIMING CONTROL SIGNAL FOR REC
24	V.PULSE	OUT	V.PULSE ADDITION TIMING CONTROL
25	RESET	-	RESET TERMINAL (RESET ON: L)
26	A.FF	OUT	AUDIO FF OUTPUT
27	N.REC_ST(H)	OUT	NORMAL AUDIO SOUND RECORDING START
28	TU_I2C_CLK	OUT	SERIAL DATA TRANSFER CLOCK FOR TUNER
29	SLOW_PULSE	-	NC
30	H.REC_ST(H)	OUT	HiFi AUDIO SOUND RECORDING START
31	TU_MUTE(H)	OUT	TUNER AUDIO MUTE CONTROL (MUTE: H)
32	VP_CTL	-	NC
33	CAP_CTL_V	OUT	CAPSTAN MOTOR CONTROL
34	DRUM_CTL_V	OUT	DRUM MOTOR CONTROL
35	A.MUTE(H)	OUT	AUDIO MUTE CONTROL (MUTE ON: H)
36	VDD	-	SYSTEM POWER
37	X OUT	-	MAIN SYSTEM CLOCK (14.32MHz)
38	X IN	-	MAIN SYSTEM CLOCK (14.32MHz)
39	VSS	-	GND
40	XC IN	-	TIMER CLOCK (32.768kHz)
41	XC OUT	-	TIMER CLOCK (32.768kHz)
42	CLK SEL	IN	SELECT FOR BACKUP METHOD (LITHIUM OR E.CAPACITOR): H
43	P.MUTE(L)	OUT	PICTURE MUTE CONTROL (MUTE: L)
44	3.58NTSC[L]/P.SAVE[L]	-	NC / NC
45	V.REF/SYNC_DET[H]	-	NC / NC
46	PROTECT	IN	DETECTION SIGNAL FOR SWITCHING POWER SUPPLY
47	VIDEO_OUT	OUT	COMPOSITE VIDEO SIGNAL OUTPUT
48	VSS2	-	GND
49	CVIN	IN	COMPOSITE VIDEO SIGNAL INPUT
50	SYN_IN	IN	COMPOSITE SYNCHRONIZING SIGNAL FOR SERVO, VERTICAL SYNCHRONIZING SIGNAL FOR OSD

PIN No.	LABEL	IN/OUT	FUNCTION
51	VDD2	-	SYSTEM POWER
52	AFCC	IN	FILTER INPUT FOR HORIZONTAL SYNCHRONIZING OF OSD CHARACTER
53	AFCLPF	OUT	FILTER OUTPUT FOR HORIZONTAL SYNCHRONIZING OF OSD CHARACTER
54	FSCI/BIT_IN(H)	-	NC
55	FSCLPF/BS_P.CTL	-	NC
56	I2C_DATA	IN/OUT	SERIAL I/O DATA
57	I2C_CLK/TEST	OUT	SERIAL DATA TRANSFER CLOCK / MECHANISM TEST SIGNAL
58	CHARAE	OUT	OSD CHARACTER DATA (FRINGE) OUTPUT
59	P.CTL[H]	OUT	CONTROL SIGNAL FOR SWITCHING POWER SUPPLY
60	CHARAM	OUT	OSD CHARACTER DATA OUTPUT
61	LSA	IN	MECHANISM MODE DETECT (A)
62	LSB	IN	MECHANISM MODE DETECT (B)
63	LSC	IN	MECHANISM MODE DETECT (C)
64	REC_SAFETY	IN	REC SAFETY SWITCH DETECT (SW ON: L)
65	D.FG_IN	IN	DRUM FG PULSE INPUT
66	D.PG_IN	IN	DRUM PICKUP PULSE INPUT (SWITCHING PULSE)
67	C.FG_AMP_OUT	OUT	SET-UP OUTPUT FOR CAPSTAN FG AMPLIFICATION FACTOR
68	C.FG_IN	IN	CAPSTAN FG PULSE INPUT
69	AMP_VREF_OUT	OUT	AMP CIRCUIT REFERENCE VOLTAGE OUTPUT
70	AMP_VREF_IN	IN	AMP CIRCUIT REFERENCE VOLTAGE INPUT
71	AVSS	-	GND
72	AMP_C	IN	CAPACITOR CONNECTION TERMINAL FOR CONTROL AMP CIRCUIT
73	AVCC	-	SYSTEM POWER
74	CTL_+	IN/OUT	CTL(+) SIGNAL
75	CTL_-	IN/OUT	CTL(-) SIGNAL
76	CTL_AMP_OUT	OUT	CTL PULSE OUTPUT
77	LOCK(L)	IN	TUNING PLL LOCK DETECT: L
78	AGC_CTL/BS_DEC[H]	-	NC
79	START SENSOR	-	NC
80	AFC/JUST CLK	IN	TUNING CHECK / NC
81	LED	IN	NC
82	VIDEO ENV	IN	AUTO TRACKING DETECT/INPUT THE AVERAGE OF PLAYBACK VIDEO SIGNAL
83	A.ENV/ND[L]	IN	AUDIO PB FM ENV. INPUT / NON HiFi MODE: L
84	END SENSOR	IN	END SENSOR
85	KEY1/IND[L]	IN	OPERATION CONTROL SIGNAL / NC
86	KEY2/IND[R]	IN	OPERATION CONTROL SIGNAL / NC
87	KILLER_DET/BS_ANT/COMPU_OUT	OUT	NC / NC / A/V COMPULINK OUTPUT
88	NORM/S	IN	
89	WIDE_DET	IN	WIDE ASPECT DETECTION
90	TU_I2C_DATA	IN/OUT	SERIAL I/O DATA FOR TUNER
91	J4/BIL_SEL	-	NC / NC
92	J5/V.UP[H]	-	NC / NC
93	J6/V.UP2[H]	-	NC / NC
94	CAP_REV[L]	OUT	CAPSTAN MOTOR REVERSE CONTROL (FWD: H/REV: L)
95	J3/STB	OUT	NC / STROBE (FOR FDP DRIVER)
96	S.CLK	OUT	SERIAL DATA TRANSFER CLOCK FROM THE FDP DRIVER TO THE ON-SCREEN IC
97	S_DATA_FRSYS	OUT	SERIAL DATA TRANSFER OUTPUT FROM THE FDP DRIVER TO THE ON-SCREEN IC
98	S_DATA_TOSYS	IN	SERIAL DATA TRANSFER OUTPUT FROM THE ON-SCREEN IC TO THE FDP DRIVER
99	LMC3	OUT	LOADING MOTOR DRIVE (3)
100	JSA	IN	INPUT FOR THE JOG SHUTTLE

4.19 SYSTEM CONTROL BLOCK DIAGRAM

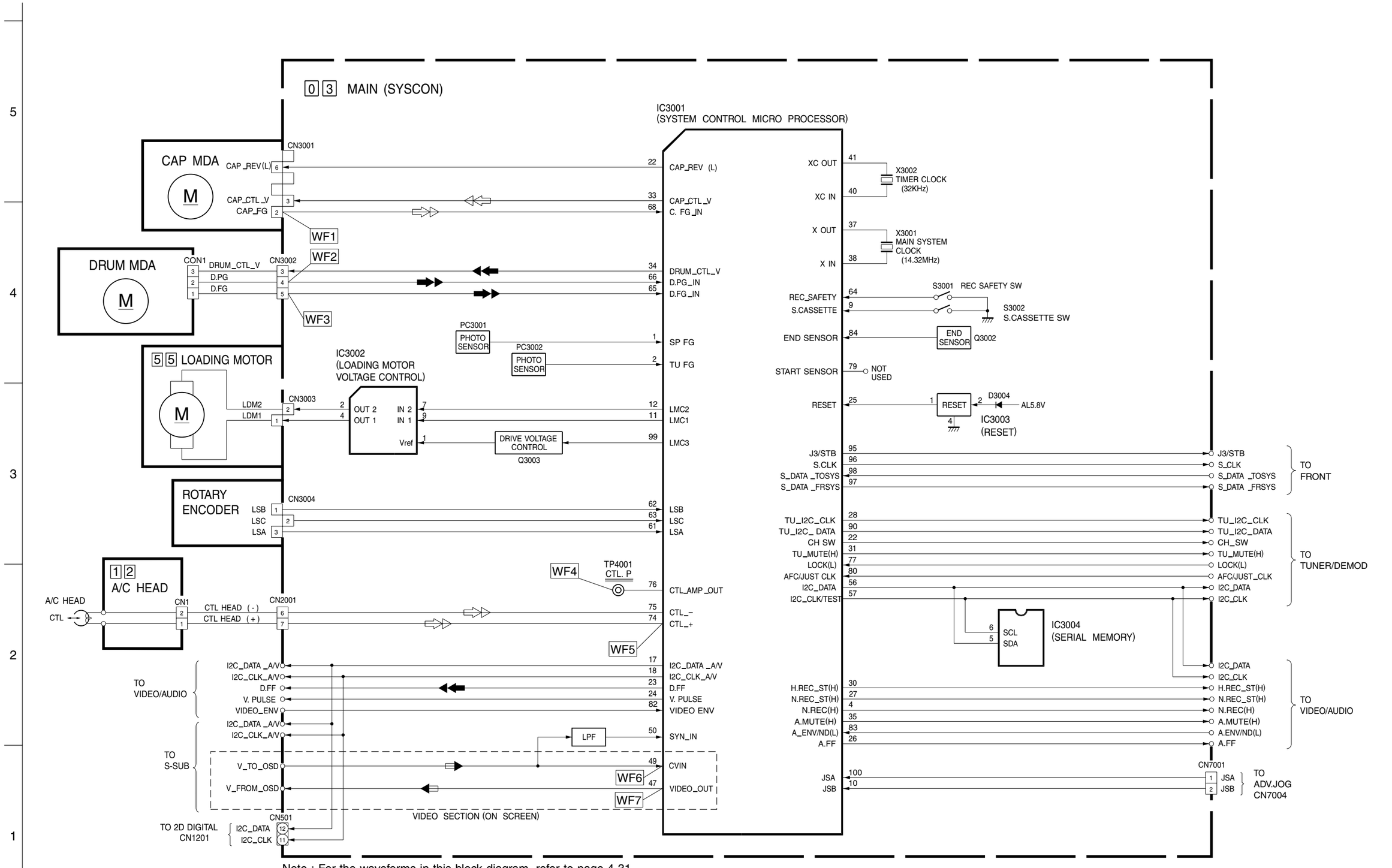

Note : For the waveforms in this block diagram, refer to page 4-31.

4.20 VIDEO BLOCK DIAGRAM

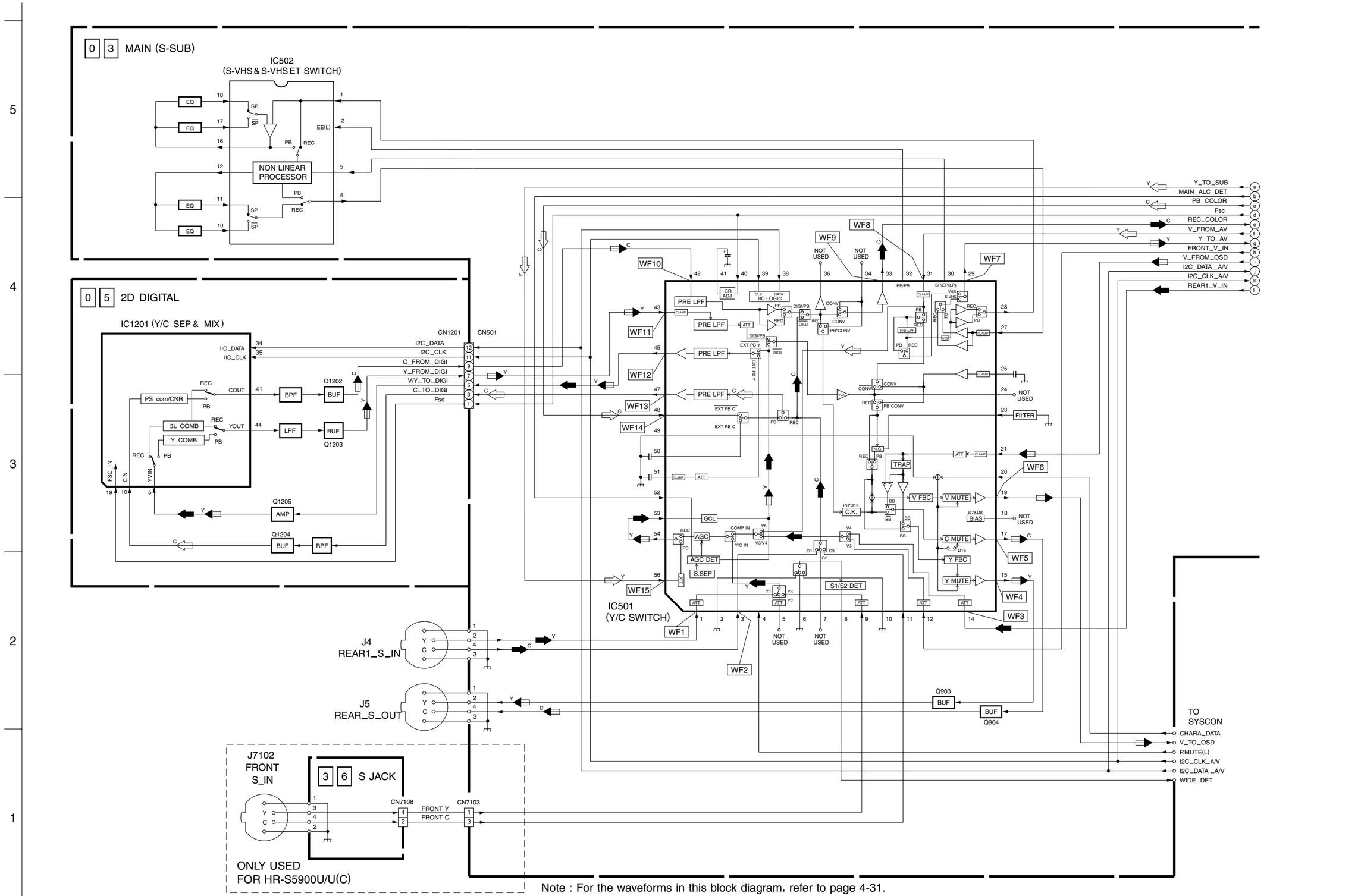

Note : For the waveforms in this block diagram, refer to page 4-31.

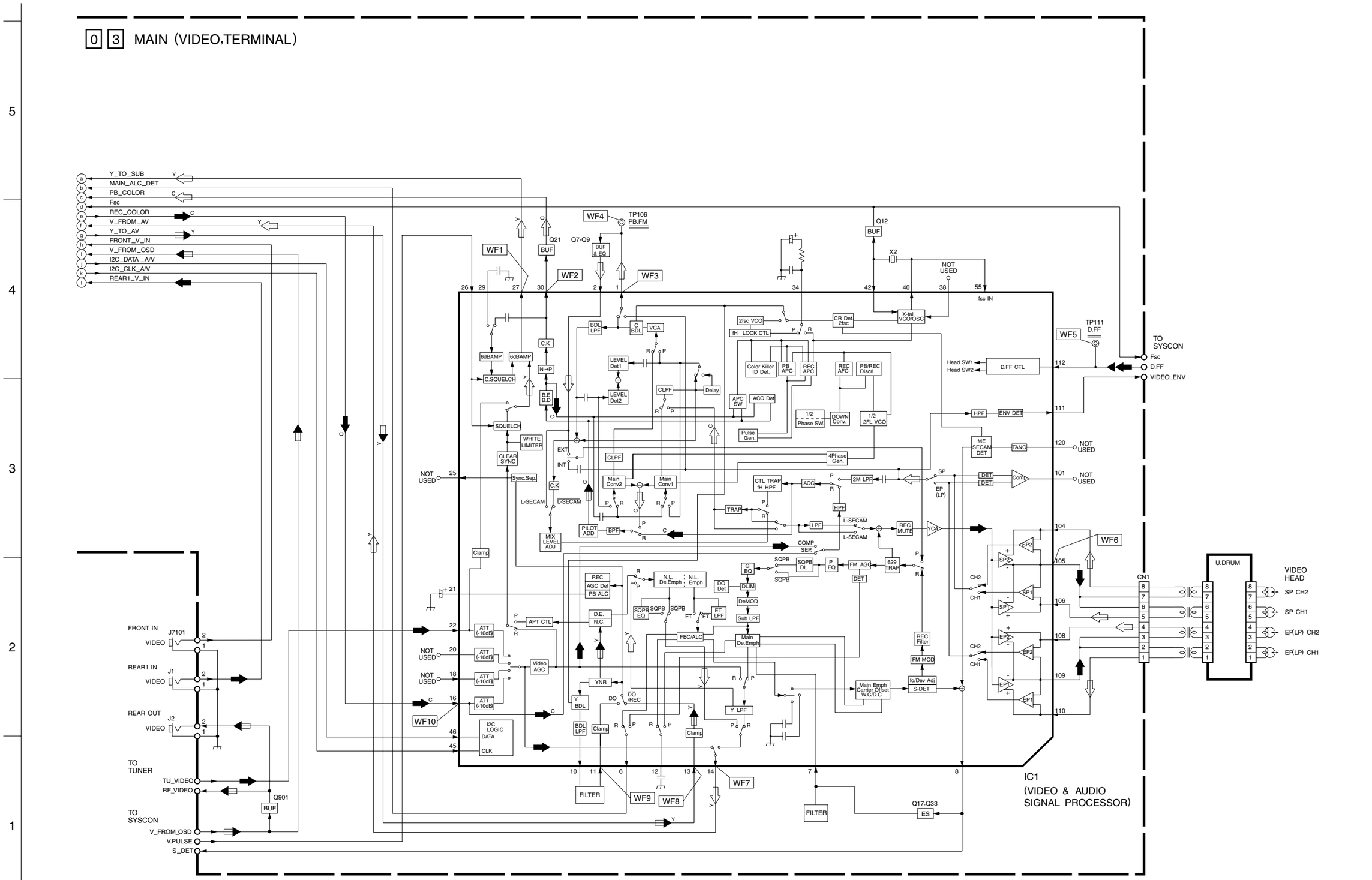

Note : For the waveforms in this block diagram, refer to page 4-31.

4.21 AUDIO BLOCK DIAGRAM

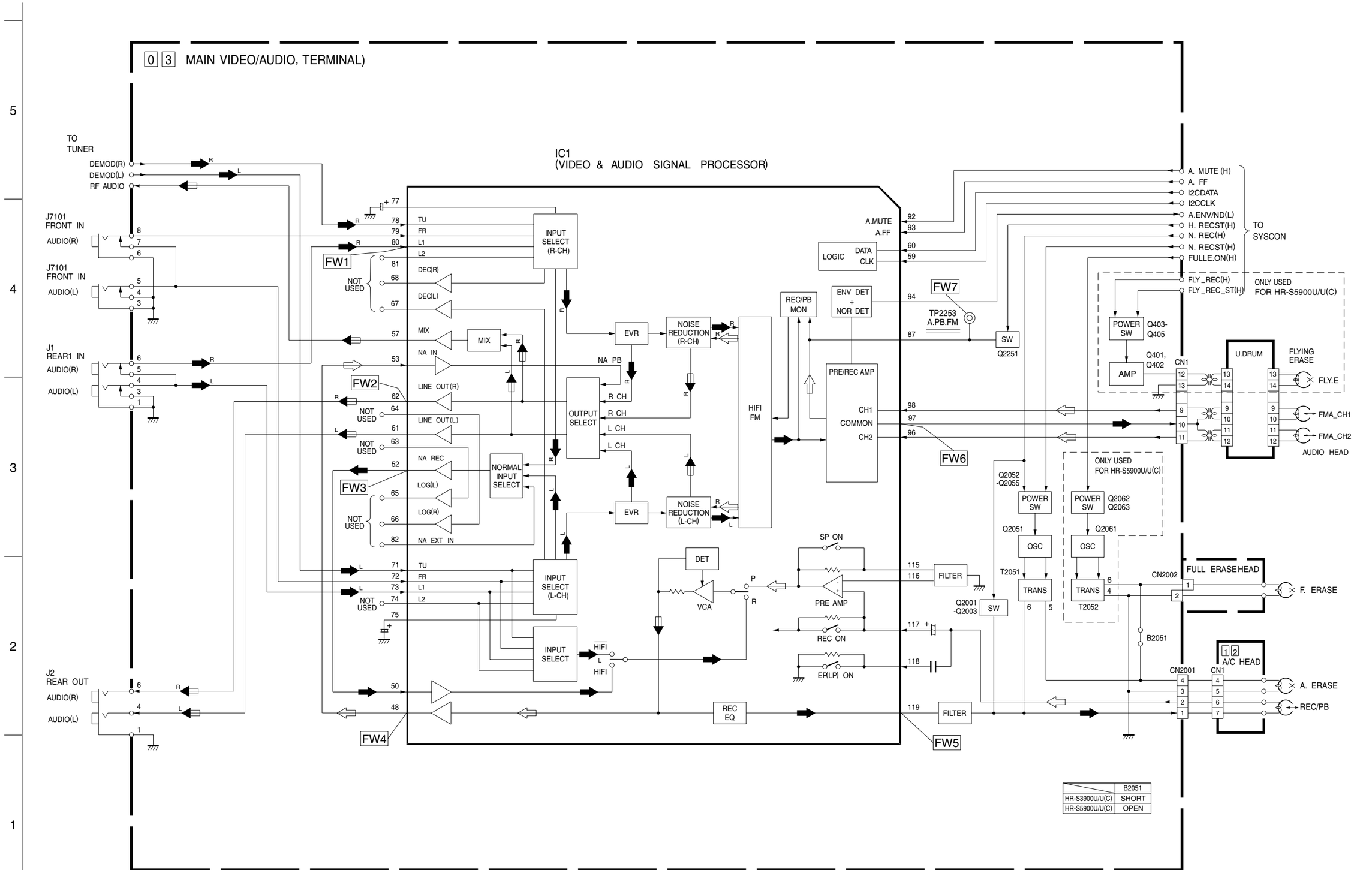

Note : For the waveforms in this block diagram, refer to page 4-31.

E. & O. E. No. 82848
(Sanwa)-V14S1/S15

SECTION 5
PARTS LIST

SAFETY PRECAUTION

Parts identified by the ⚠ symbol are critical for safety. Replace only with specified part numbers.

5.1 PACKING AND ACCESSORY ASSEMBLY <M1>

The instruction manual to be provided with this product will differ according to the destination.

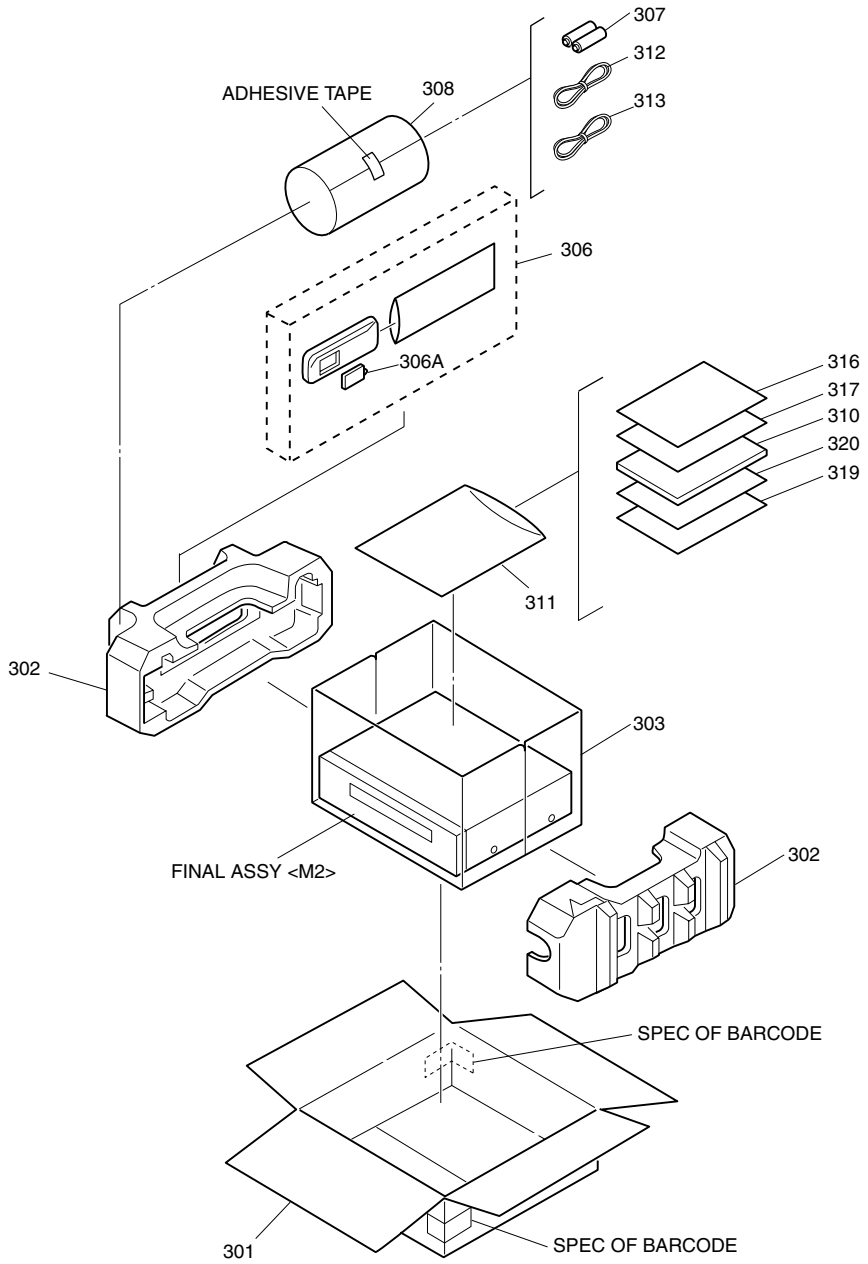

****

PACKING AND ACCESSORY ASSEMBLY <M1>

#	⚠	REF No.	PART No.	PART NAME, DESCRIPTION
		301	LP30899-001B	PACKING CASE
		302	LP30718-001B	CUSHION ASSY
		303	PQM30021-93	POLY BAG
		306	LP20303-015A	REMOTE CONTROLLER
		306A	LP40225-002A	COVER(BATTERY)
		307	–	BATTERY,X2(“AA” TYPE)
		308	QPC02202230P	POLY BAG
	⚠	310	LPT0503-001A	INST.BOOK(EN)
	⚠		LPT0503-002A	INST.BOOK(FR),S3900U(C)/S5900U(C)
		311	QPC02503530P	POLY BAG
		312	PEAC0294-04	RF CABLE
		313	QAM0004-002	S CABLE
		316	BT-52004-1	WARRANTY CARD,S3900U(C),S5900U(C)
		317	BT-51020-2	REGIST.CARD,S3900U/S5900U
		319	BT-20071B	SER.NET CARD,S3900U(C)/S5900U(C)
		320	LP30666-002B	SHEET(COUPON)

5.2 FINAL ASSEMBLY <M2>

BEWARE OF BOGUS PARTS

Parts that do not meet specifications may cause trouble in regard to safety and performance. We recommend that genuine JVC parts be used.

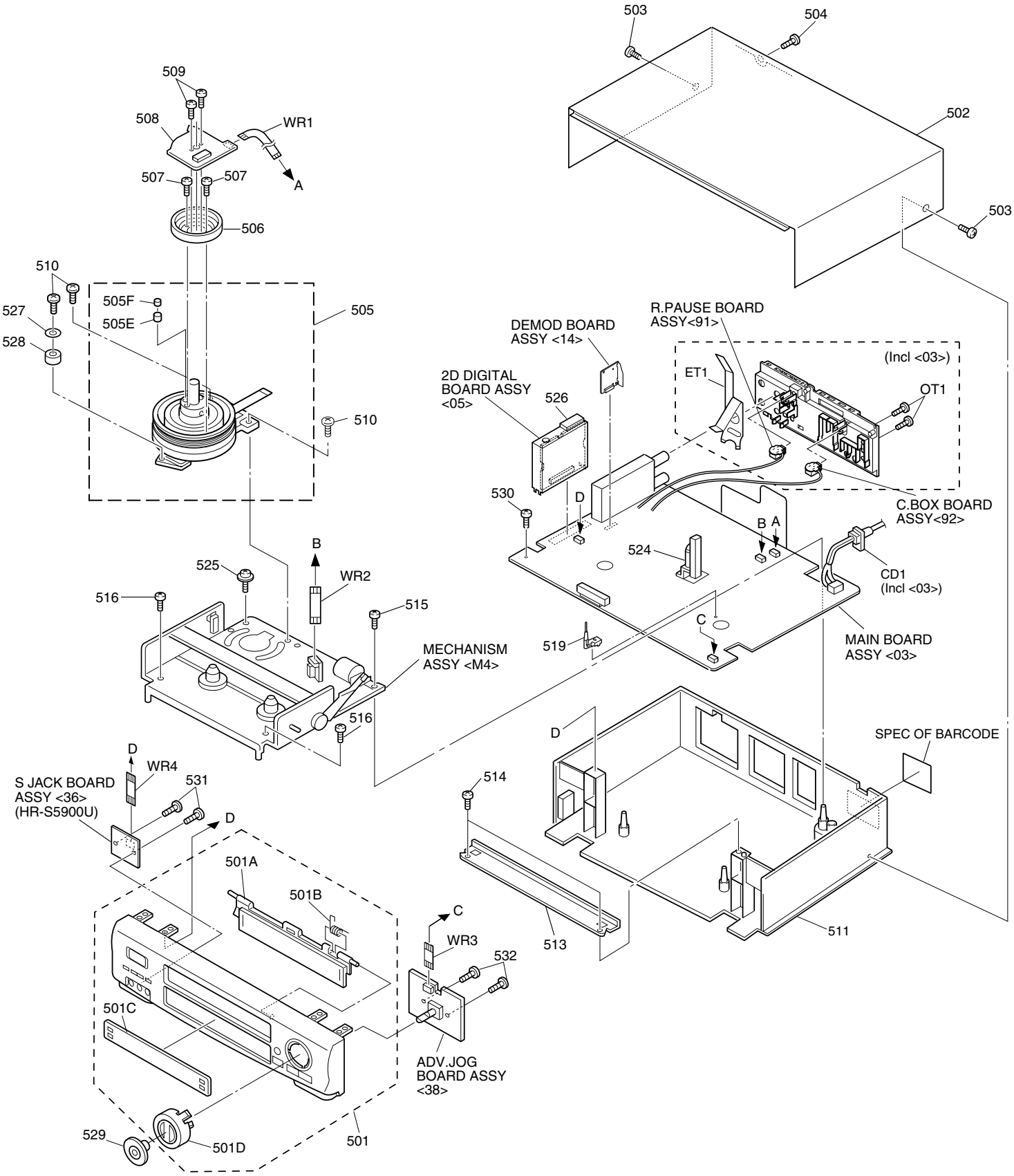

#	⚠	REF No.	PART No.	PART NAME, DESCRIPTION

****

FINAL ASSEMBLY <M2>

	⚠	501	LP10289-062C	FRONT PANEL ASSY,S5900U/U(C)
	⚠		LP10289-063C	FRONT PANEL ASSY,S3900U/U(C)
		501A	LP20868-005A	CASSETTE DOOR,S5900U/U(C)
			LP20868-035A	CASSETTE DOOR,S3900U/U(C)
		501B	PQ46448	TORSION SPRING
		501C	LP20869-092A	DISPLAY WINDOW,S5900U/U(C)
			LP20869-093A	DISPLAY WINDOW,S3900U/U(C)
		501D	LP21014-001C	ORNAMENT
	⚠	502	LP10013-021D	TOP COVER
		503	QYTDSF3010M	SCREW,X2 TOP COVER(SIDE)
		504	QYTDSF3010M	SCREW,TOP COVER(REAR)
		505	LP20981-010A	DRUM SUB ASSY,S3900U/U(C)
			LP20981-012A	DRUM SUB ASSY,S5900U/U(C)
		505E	LP40323-001A	CONTACT
		505F	LP30004-014A	COMPRESSION SPRING
		506	PDZ0179-1-4	ROTOR ASSY
		507	QYSPSP3006Z	SCREW,X2
	⚠	508	QAR0169-002	STATOR ASSY
		509	QYSPSPH2606Z	SCREW,X2
		510	QYTDST2610Z	SCREW,X3 DRUM
	⚠	511	LP10108-012E	BOTTOM CHASSIS
		513	LP30312-001B	BRACKET(CHASSIS)
		514	QYTDSF3010Z	SCREW,X2
		515	QYTDSF4012Z	SCREW,MECHA
		516	QYTDSF3010Z	SCREW,X2 MECHA
		519	LP40407-001A	KNOB ASSY
		524	LP40253-001B	STOPPER
		525	PQ40413	SPECIAL SCREW,MECHA
		526	LP30002-088B	SPACER,SHIELD FRAME
		527	QYWWS267505Z	WASHER
		528	LP30017-021A	SPACER
		529	LP30954-001A	KNOB ASSY
		530	QYTDSF3010Z	SCREW,MAIN
		531	QYTDSF2608Z	SCREW,X2 S JACK
		532	QYTDSF2608Z	SCREW,X2 JOG
		WR1	QUQ212-0518CG	FFC WIRE,DRUM CN3002
		WR2	WJT0005-002A	E-CARD WIRE,A/C HEAD CN2001
		WR3	QUQ112-0914CG	FFC WIRE,FRONT CN7001
		WR4	WJT0026-001A	E-CARD WIRE,S(FSA) CN7103,S5900U/U(C)

#	⚠	REF No.	PART No.	PART NAME, DESCRIPTION

5.3 MECHANISM ASSEMBLY <M4>

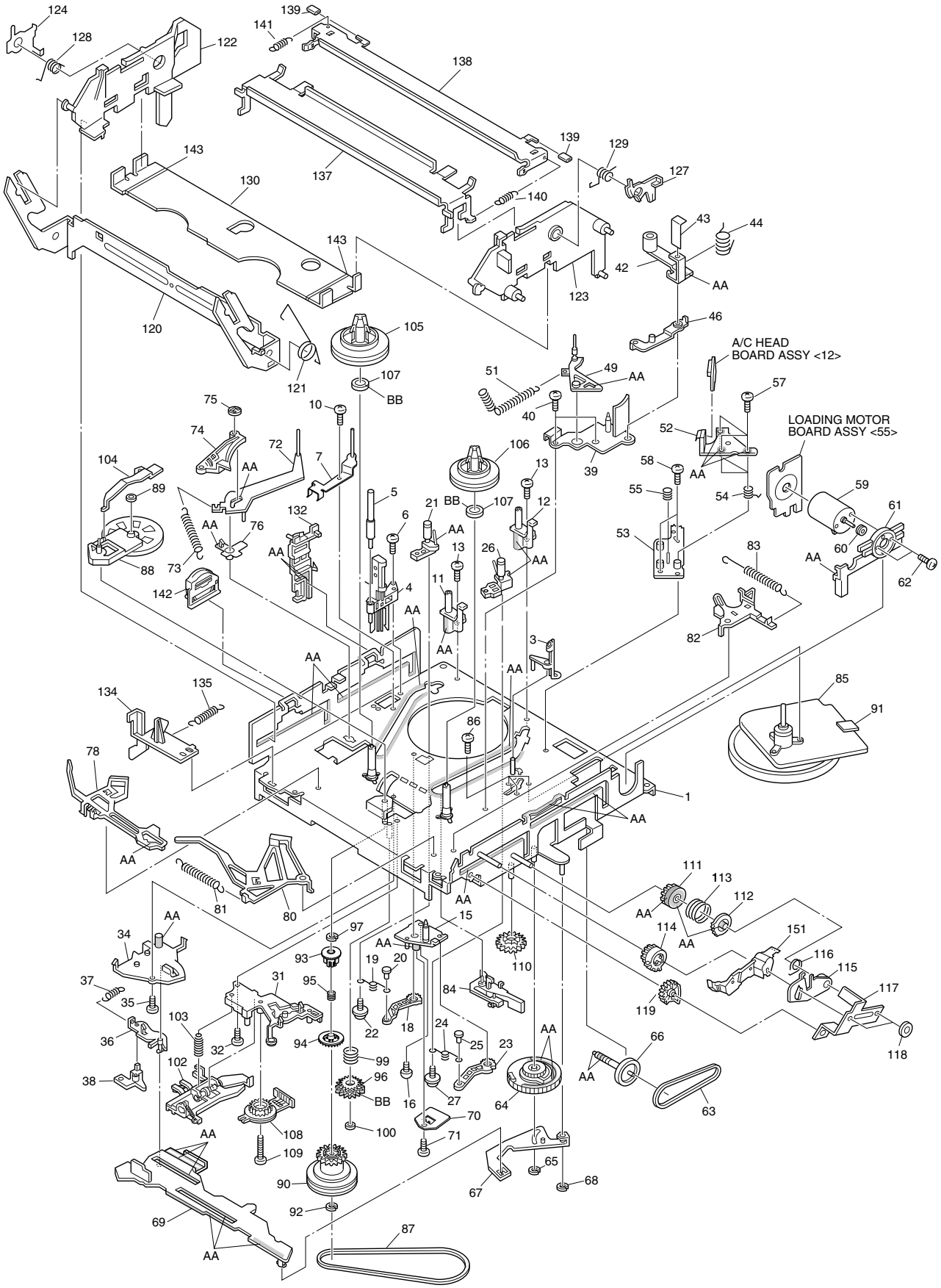

Classification	Part No.	Symbol in drawing
Grease	KYODO-SH-P	AA
Oil	COSMO-HV56	BB

NOTE: The section marked in **AA** and **BB** indicate lubrication and greasing areas.

#	⚠	REF No.	PART No.	PART NAME, DESCRIPTION

****

MECHANISM ASSEMBLY <M4>

		1	LP20821-006A	MAIN DECK ASSY
		3	LP30492-002B	GUIDE POLE GUARD
		4	NAH0001-001	FULL ERASE HEAD
		5	LP40098-001B	GUIDE POLE(SUPPLY)
		6	QYTDST2608Z	SCREW,FE HEAD
		7	LP40637-002A	TENSION STUD BASE ASSY
		10	QYTDST2606Z	SCREW
		11	LP30409-002C	UV CATCHER 2
		12	LP30409-002C	UV CATCHER 2
		13	QYTPST2606Z	SCREW,X2
		15	LP30223-003C	LOADING ARM GEAR SHAFT
		16	QYTDST2606Z	SCREW
		18	LP30224-001B	LOADING ARM GEAR(SUPPLY)
		19	LP40099-001A	TORSION ARM
		20	LP40100-001A	PIN
		21	LP40101-006A	POLE BASE ASSY(SUPPLY)
		22	QYSPSTG2606Z	SCREW
		23	LP40103-002B	LOADING ARM GEAR(TAKE UP)
		24	LP40099-001A	TORSION ARM
		25	LP40100-001A	PIN
		26	LP40104-006A	POLE BASE ASSY(TAKE UP)
		27	QYSPSTG2606Z	SCREW
		31	LP20233-004B	ROTARY ENCODER GUIDE
		32	QYTPST2606Z	SCREW
		34	LP30226-004E	CONTROL PLATE GUIDE
		35	QYTPST2605Z	SCREW
		36	LP30249-003B	TAKE UP LEVER
		37	LP30003-006A	TENSION SPRING
		38	LP40119-002A	TAKE UP HEAD
		39	LP20234-004B	LID GUIDE
		40	QYTDST2606Z	SCREW,X2
		42	LP40105-003A	PINCH ROLLER ARM ASSY
		43	LP40753-001A	PINCH ROLLER SHEET3
		44	LP40148-002A	TORSION SPRING
		46	LP40149-001C	PRESS LEVER ASSY
		49	LP40106-007A	GUIDE ARM ASSY
		51	LP40134-002A	TENSION SPRING
		52	QAH0058-001	AC HEAD
		53	LP30228-001A	HEAD BASE
		54	LP30004-013A	COMPRESSION SPRING,X3
		55	LP40236-001A	COMPRESSION SPRING
		57	LP40213-002B	SPECIAL SCREW,X3
		58	QYTDST2608Z	SCREW,X2
		59	QAR0023-001	LOADING MOTOR
		60	PQ43546-1-2	MOTOR PULLEY
		61	LP30230-001B	MOTOR GUIDE
		62	QYTPSP3003Z	SCREW,X2
		63	LP30005-003A	BELT,LOADING MOTOR
		64	LP20791-002D	CONTROL CAM
		65	PQM30017-24	SLIT WASHER
		66	LP40120-001A	WORM GEAR
		67	LP40107-002A	LINK LEVER ASSY
		68	PQM30017-24	SLIT WASHER
		69	LP10201-003E	CONTROL PLATE
		70	LP40379-001B	CONTROL BRACKET(1)
		71	QYTDSF2608M	SCREW
		72	LP40108-002A	TENSION ARM ASSY
		73	LP30003-010A	TENSION SPRING
		74	LP40109-003D	TENSION BRAKE ASSY
		75	PQ46302-1-3	ADJUST PIN
		76	LP30232-002A	TENSION ARM BEARING
		78	LP40532-008B	MAIN BRAKE ASSY (SUPPLY)
		80	LP40111-011A	MAIN BRAKE ASSY (TAKE UP)
		81	LP30003-026A	TENSION SPRING
		82	LP40112-001F	SUB BRAKE ASSY(TAKE UP)
		83	LP40357-002A	TENSION SPRING
		84	LP40461-001A	CAPSTAN BRAKE ASSY
		85	QAR0087-005	CAPSTAN MOTOR
		86	QYTDSF2606M	SCREW,X3
		87	LP30005-007A	BELT,CAPSTAN MOTOR
		88	LP40114-012A	IDLER ARM ASSY
		89	LP40599-001A	WASHER
		90	LP40593-001A	CLUTCH UNIT 3
		91	LP30002-097A	SPACER,CAPSTAN MOTOR
		92	PQM30017-47	SLIT WASHER
		93	LP30696-002A	CLUTCH GEAR 4
		94	LP30697-003A	COUPLING GEAR
		95	LP40554-002A	COMPRESSION SPRING
		96	LP40442-001A	DIRECT GEAR
		97	LP30017-019A	SPACER
		99	LP40483-002A	COMPRESSION SPRING
		100	LP30016-001A	SLIT WASHER
		102	LP40484-001J	CHANGE LEVER ASSY
		103	LP40512-002B	COMPRESSION SPRING
		104	LP30236-002C	IDLER LEVER
		105	LP20237-001B	REEL DISK (SUPPLY)
		106	LP20238-001B	REEL DISK (TAKE UP)
		107	LP30017-015A	SPACER,X2
		108	QSW0554-003	ROTARY ENCODER
		109	QYTPST2620Z	SCREW
		110	LP30237-002B	CASSETTE GEAR
		111	LP30239-002G	LIMIT GEAR(1)
		112	LP30240-002G	LIMIT GEAR(2)
		113	LP40136-001E	TORSION SPRING
		114	LP30242-002A	RELAY GEAR
		115	LP30339-002E	OPENER GUIDE
		116	LP40545-001A	TORSION SPRING
		117	LP40214-001B	C.H.BRACKET
		118	PQM30017-47	SLIT WASHER,X2
		119	LP30243-001D	DRIVE GEAR
		120	LP20240-001G	DRIVE ARM
		121	LP40137-001A	TORSION SPRING
		122	LP10081-002L	SIDE HOLDER(L)
		123	LP10082-002M	SIDE HOLDER(R)
		124	LP30255-006A	LOCK LEVER(L)
		127	LP30256-001H	LOCK LEVER(R)
		128	LP40168-003A	TORSION SPRING(L)
		129	LP40218-001B	TORSION SPRING(R)
		130	LP30257-001G	CASSETTE HOLDER
		132	LP30244-002G	GUIDE RAIL
		134	LP30245-002F	REC SAFETY LEVER
		135	LP30003-004A	TENSION SPRING
		137	LP20578-001C	TOP GUIDE
		138	LP30500-001C	HOLD PLATE
		139	LP40450-003A	PAD,X2
		140	LP30003-025B	TENSION SPRING
		141	LP30003-024A	TENSION SPRING
		142	LP40481-003A	ROLLER CAM ASSY
		143	LP30019-014A	PAD,X2
		151	LP20324-003B	DOOR OPENER

5.4 ELECTRICAL PARTS LIST

#	⚠ REF No.	PART No.	PART NAME, DESCRIPTION
**********			

MAIN BOARD ASSEMBLY <03>

	PW1	LPA10134-03D1	MAIN BOARD ASSY,S5900U/U(C)
		LPA10134-05D1	MAIN BOARD ASSY,S3900U/U(C)
	IC1	JCP8050-NSA	IC
		or JCP8050-MSA	IC
	IC501	JCP8038	IC
	IC502	VC2076DP	IC
	IC3001	MN101D02HWD	IC
	IC3002	BA6956AN	IC
	IC3003	IC-PST3440U-X	IC
	IC3004	S-24C04BFJ-X	IC
		or X24C04S	IC
		or 24LC04B/SN-X	IC
		or AT24C04N-10SC-X	IC
		or BR24C04F-W-X	IC
	IC5301	L5431	IC
		or MM1431AT	IC
	IC7001	PT6312LQ	IC
		or UPD16312GB/H/	IC
	IC7003	GP1U291Q	IR DETECT UNIT
		or PIC-28143LJ	IR DETECT UNIT
		or PIC-37143LJ	IR DETECT UNIT
		or PNA4652M00YC	IR DETECT UNIT
	Q1	2SC4081/S/-X	TRANSISTOR,S3900U/U(C)
	Q2	2SC4081/S/-X	TRANSISTOR,S3900U/U(C)
	Q3	2SC4081/S/-X	TRANSISTOR,S3900U/U(C)
	Q4	2SC4081/S/-X	TRANSISTOR,S3900U/U(C)
	Q7	2SC4081/QRS/-X	TRANSISTOR
		or 2PC4081/R/-X	TRANSISTOR
	Q8	2SC4081/QRS/-X	TRANSISTOR
		or 2PC4081/R/-X	TRANSISTOR
	Q9	2SA1576A/QR/-X	TRANSISTOR
		or 2PA1576/R/-X	TRANSISTOR
	Q12	2SA1576A/QR/-X	TRANSISTOR
		or 2PA1576/R/-X	TRANSISTOR
	Q17	DTC144WU	TRANSISTOR
		or PDTC144WU	TRANSISTOR
		or RN1309	TRANSISTOR
		or UN521E	TRANSISTOR
	Q21	2SA1576A/QR/-X	TRANSISTOR
		or 2PA1576/R/-X	TRANSISTOR
	Q33	DTC144WU	TRANSISTOR
		or PDTC144WU	TRANSISTOR
		or UN521E	TRANSISTOR
		or RN1309	TRANSISTOR
	Q38	2SC4081/QRS/-X	TRANSISTOR
		or 2PC4081/R/-X	TRANSISTOR
	Q401	2SA1576A/QR/-X	TRANSISTOR,S5900U/U(C)
	Q402	2SA1576A/QR/-X	TRANSISTOR,S5900U/U(C)
	Q403	DTC144WU	TRANSISTOR,S5900U/U(C)
		or PDTC144WU	TRANSISTOR,S5900U/U(C)
		or RN1309	TRANSISTOR,S5900U/U(C)
		or UN521E	TRANSISTOR,S5900U/U(C)
	Q404	DTC144WU	TRANSISTOR,S5900U/U(C)
		or PDTC144WU	TRANSISTOR,S5900U/U(C)
		or RN1309	TRANSISTOR,S5900U/U(C)
		or UN521E	TRANSISTOR,S5900U/U(C)
	Q405	2SA1576A/QR/-X	TRANSISTOR,S5900U/U(C)
	Q901	2SA1576A/QR/-X	TRANSISTOR
		or 2PA1576/R/-X	TRANSISTOR
	Q903	2SA1576A/QR/-X	TRANSISTOR
		or 2PA1576/R/-X	TRANSISTOR
	Q904	2SA1576A/QR/-X	TRANSISTOR
		or 2PA1576/R/-X	TRANSISTOR
	Q2001	2SC4081/QRS/-X	TRANSISTOR
		or 2SD1819A/QRS/-X	TRANSISTOR
		or 2PC4081/R/-X	TRANSISTOR
	Q2002	2SC4081/QRS/-X	TRANSISTOR
		or 2PC4081/R/-X	TRANSISTOR
		or 2SD1819A/QRS/-X	TRANSISTOR
	Q2003	DTA144WU	TRANSISTOR
		or PDTA144WU	TRANSISTOR
		or RN2309	TRANSISTOR
		or UN511E	TRANSISTOR
	Q2051	2SC4081/QRS/-X	TRANSISTOR
		or 2PC4081/R/-X	TRANSISTOR
		or 2SD1819A/QRS/-X	TRANSISTOR
	Q2052	2SA1576A/QR/-X	TRANSISTOR
		or 2SB1218A/QR/-X	TRANSISTOR
		or 2PA1576/R/-X	TRANSISTOR
	Q2053	DTC144WU	TRANSISTOR
		or PDTC144WU	TRANSISTOR
		or RN1309	TRANSISTOR
		or UN521E	TRANSISTOR
	Q2054	2SA1576A/QR/-X	TRANSISTOR
		or 2PA1576/R/-X	TRANSISTOR
		or 2SB1218A/QR/-X	TRANSISTOR
	Q2055	DTC144WU	TRANSISTOR
		or PDTC144WU	TRANSISTOR
		or RN1309	TRANSISTOR
		or UN521E	TRANSISTOR
	Q2061	2SC4081/QRS/-X	TRANSISTOR,S5900U/U(C)
		or 2PC4081/R/-X	TRANSISTOR,S5900U/U(C)
		or 2SD1819A/QRS/-X	TRANSISTOR,S5900U/U(C)
	Q2062	2SA1576A/QR/-X	TRANSISTOR,S5900U/U(C)
		or 2PA1576/R/-X	TRANSISTOR,S5900U/U(C)
		or 2SB1218A/QR/-X	TRANSISTOR,S5900U/U(C)
	Q2063	DTC144WU	TRANSISTOR,S5900U/U(C)
		or PDTC144WU	TRANSISTOR,S5900U/U(C)
		or RN1309	TRANSISTOR,S5900U/U(C)
		or UN521E	TRANSISTOR,S5900U/U(C)
	Q2251	DTA144WU	TRANSISTOR
		or PDTA144WU	TRANSISTOR
		or RN2309	TRANSISTOR
		or UN511E	TRANSISTOR
	Q3002	PTZ-NV16	PHOTO TRANSISTO
		or PTZ-NV16A	PHOTO TRANSISTO
	Q3005	UN521K	TRANSISTOR
		or DTC114WU	TRANSISTOR
	Q4001	UN5211	TRANSISTOR
		or DTC114EU	TRANSISTOR
		or RN1302	TRANSISTOR
		or PDTC114EU	TRANSISTOR
	Q4002	2SD1819A/QRS/-X	TRANSISTOR
		or 2SC4081/QRS/-X	TRANSISTOR
		or 2PC4081/R/-X	TRANSISTOR
	Q5101	2SK2043-CB14	FE TRANSISTOR
		or 2SK2043	FE TRANSISTOR
		or 2SK2324-LT	POWER MOS FET

#	⚠	REF No.	PART No.	PART NAME, DESCRIPTION	
			or 2SK2324	POWER MOS FET	
		Q5102	2SD2144S/UV/-T	TRANSISTOR	
		Q5302	2SD2375/QP/	TRANSISTOR	
		Q5303	2SD1819A/RS/-X	TRANSISTOR	
			or 2SC4081/RS/-X	TRANSISTOR	
			or 2PC4081/R/-X	TRANSISTOR	
		Q5304	2SD2144S/UV/-T	TRANSISTOR	
		Q5305	DTA114EU	TRANSISTOR	
			or PDTA114EU	TRANSISTOR	
			or RN2302	TRANSISTOR	
			or UN5111	TRANSISTOR	
		Q5306	DTC114EU	TRANSISTOR	
			or PDTC114EU	TRANSISTOR	
			or UN5211	TRANSISTOR	
			or RN1302	TRANSISTOR	
		Q6030	2SB1218A/QR/-X	TRANSISTOR	
			or 2SA1576A/QR/-X	TRANSISTOR	
			or 2PA1576/R/-X	TRANSISTOR	
		Q6551	2SC1740S/QRS/-T	TRANSISTOR	
			or 2SC3199/YG/-T	TRANSISTOR	
			or KTC3199/YG/-T	TRANSISTOR	
		Q7201	2SA720/RS/-T	TRANSISTOR	
		D1	1SS133	DIODE	
			or 1SS270A	DIODE	
		D2	1SS133	DIODE	
			or 1SS270A	DIODE	
		D12	1SS270A	DIODE	
			or 1SS133	DIODE	
		D2202	MTZJ9.1B	ZENER DIODE	
		D3001	LNB2301L01VI	LE DIODE	
		D3002	1SS133	DIODE	
			or 1SS270A	DIODE	
		D3005	11ES2	DIODE	
		D3007	1SS355	DIODE	
		D3013	DA204U	DIODE	
		D5001	S1WB/A/60-4102	BRIDGE DIODE	
			or S1WB/A/60-X	BRIDGE DIODE	
			or S1WB(A)60F4072X	BRIDGE DIODE	
		D5101	AU01	FR DIODE	
			or ERA18-04-T2	FR DIODE	
			or 10ELS4	FR DIODE	
			or 1SR153-400-T2	FR DIODE	
		D5102	AU01	FR DIODE	
			or ERA18-04-T2	FR DIODE	
			or 1SR153-400-T2	FR DIODE	
			or 10ELS4	FR DIODE	
		D5103	1SS133	DIODE	
			or 1SS270A	DIODE	
		D5201	AU01Z	FR DIODE	
			or 10ELS2	FR DIODE	
		D5203	AU01Z	FR DIODE	
			or 10ELS2	FR DIODE	
		D5204	AU01Z	FR DIODE	
			or 10ELS2	FR DIODE	
		D5206	FMB-24	BARRIER DIODE	
			or FSQ05A04B	SB DIODE	
			or SB640FCT	SB DIODE	
			or YG801C04	SB DIODE	
			or SF5SC4	SB DIODE	
		D5210	AU01Z	FR DIODE	
			or ERA18-02-T2	FR DIODE	

#	⚠	REF No.	PART No.	PART NAME, DESCRIPTION	
			or 10ELS2	FR DIODE	
			or 1SR153-400-T2	FR DIODE	
			or PG104RS	FR DIODE	
		D5211	AU01Z	FR DIODE	
			or ERA18-02-T2	FR DIODE	
			or PG104RS	FR DIODE	
			or 10ELS2	FR DIODE	
			or 1SR153-400-T2	FR DIODE	
		D5301	MTZJ15C	ZENER DIODE	
			or RD15ES/B3/-T2	ZENER DIODE	
		D5302	NRSA02J-0R0X	MG RESISTOR	0Ω,1/10W
		D5303	RD5.1JS/B2/-T2	ZENER DIODE	
			or MA4051N/M/-T2	ZENER DIODE	
		D5304	1SS355	DIODE	
		D5307	QUY153-050Y	IM BUS WIRE	
		D5309	MTZJ27C	ZENER DIODE	
			or RD27ES/B3/-T2	ZENER DIODE	
		D5310	1SS133	DIODE	
			or 1SS270A	DIODE	
		D6002	HZ30-2L-T2	ZENER DIODE	
			or HZ30-2LTD	Z DIODE (M)	
		D6551	MTZJ10B	ZENER DIODE	
		D7001	RD9.1ES/B2/-T2	ZENER DIODE	
			or UZ9.1BSB	ZENER DIODE	
			or MTZJ9.1B	ZENER DIODE	
		D7003	1SS133	DIODE	
			or 1SS270A	DIODE	
		D7004	1SS133	DIODE	
			or 1SS270A	DIODE	
		D7005	1SS133	DIODE	
			or 1SS270A	DIODE	
		D7006	1SS133	DIODE	
			or 1SS270A	DIODE	
		D7008	SLR-325MC-T	LE DIODE	
		D7009	SLR-325VC-T	LE DIODE	
		R1	NRVA02D-622X	CMF RESISTOR	6.2kΩ,1/10W
		R2	NRVA02D-152X	CMF RESISTOR	1.5kΩ,1/10W
		R3	NRSA02J-152X	MG RESISTOR	1.5kΩ,1/10W
		R6	NRSA02J-103X	MG RESISTOR	10kΩ,1/10W
		R7	NRSA02J-102X	MG RESISTOR	1kΩ,1/10W
		R8	NRSA02J-0R0X	MG RESISTOR	0Ω,1/10W
		R9	NRSA02J-0R0X	MG RESISTOR	0Ω,1/10W
		R12	NRSA02J-0R0X	MG RESISTOR	0Ω,1/10W
		R21	NRSA02J-102X	MG RESISTOR	1kΩ,1/10W
		R22	NRSA02J-102X	MG RESISTOR	1kΩ,1/10W
		R25	NRSA02J-103X	MG RESISTOR	10kΩ,1/10W
		R26	NRSA02J-822X	MG RESISTOR	8.2kΩ,1/10W
		R27	NRSA02J-102X	MG RESISTOR	1kΩ,1/10W
		R28	NRSA02J-102X	MG RESISTOR	1kΩ,1/10W
		R29	NRSA02J-222X	MG RESISTOR	2.2kΩ,1/10W
		R30	NRSA02J-0R0X	MG RESISTOR	0Ω,1/10W
		R31	NRSA02J-122X	MG RESISTOR	1.2kΩ,1/10W
		R32	NRSA02J-102X	MG RESISTOR	1kΩ,1/10W
		R33	NDC21HJ-7R0X	CAPACITOR	7pF,50V
		R34	NDC21HJ-270X	CAPACITOR	27pF,50V
		R36	NRSA02J-182X	MG RESISTOR	1.8kΩ,1/10W
		R39	NRSA02J-0R0X	MG RESISTOR	0Ω,1/10W
		R42	NRSA02J-681X	MG RESISTOR	680Ω,1/10W
		R44	NRSA02J-223X	MG RESISTOR	22kΩ,1/10W
		R45	NRSA02J-333X	MG RESISTOR	33kΩ,1/10W
		R46	NRSA02J-471X	MG RESISTOR	470Ω,1/10W

#	⚠	REF No.	PART No.	PART NAME, DESCRIPTION	
		R48	NRSA02J-102X	MG RESISTOR	1kΩ,1/10W
		R68	NRSA02J-222X	MG RESISTOR	2.2kΩ,1/10W
		R77	NRSA02J-103X	MG RESISTOR	10kΩ,1/10W
		R90	NRSA02J-471X	MG RESISTOR	470Ω,1/10W
		R92	NRSA02J-0R0X	MG RESISTOR	0Ω,1/10W
		R93	NRSA02J-102X	MG RESISTOR	1kΩ,1/10W
		R104	NRSA02J-682X	MG RESISTOR	6.8kΩ,1/10W
		R118	NRSA02J-0R0X	MG RESISTOR	0Ω,1/10W
		R120	NRSA02J-103X	MG RESISTOR	10kΩ,1/10W
		R201	NRSA02J-332X	MG RESISTOR	3.3kΩ,1/10W
		R202	NRSA02J-222X	MG RESISTOR	2.2kΩ,1/10W
		R401	NRSA02J-221X	MG RESISTOR,S5900U/U(C)	220Ω,1/10W
		R402	NRSA02J-102X	MG RESISTOR,S5900U/U(C)	1kΩ,1/10W
		R403	NRSA02J-391X	MG RESISTOR,S5900U/U(C)	390Ω,1/10W
		R404	NRSA02J-473X	MG RESISTOR,S5900U/U(C)	47kΩ,1/10W
		R405	NRSA02J-683X	MG RESISTOR,S5900U/U(C)	68kΩ,1/10W
		R407	NRSA02J-472X	MG RESISTOR,S5900U/U(C)	4.7kΩ,1/10W
		R408	NRSA02J-473X	MG RESISTOR,S5900U/U(C)	47kΩ,1/10W
		R503	NRSA02J-221X	MG RESISTOR	220Ω,1/10W
		R504	NRSA02J-332X	MG RESISTOR	3.3kΩ,1/10W
		R505	NRSA02J-392X	MG RESISTOR	3.9kΩ,1/10W
		R506	NRSA02J-391X	MG RESISTOR	390Ω,1/10W
		R507	NRSA02J-122X	MG RESISTOR	1.2kΩ,1/10W
		R508	NRSA02J-151X	MG RESISTOR	150Ω,1/10W
		R509	NRSA02J-162X	MG RESISTOR	1.6kΩ,1/10W
		R510	NRVA02D-102X	CMF RESISTOR	1kΩ,1/10W
		R511	NRVA02D-471X	CMF RESISTOR	470Ω,1/10W
		R512	NRVA02D-102X	CMF RESISTOR	1kΩ,1/10W
		R513	NRVA02D-152X	CMF RESISTOR	1.5kΩ,1/10W
		R514	NRVA02D-332X	CMF RESISTOR	3.3kΩ,1/10W
		R515	NRVA02D-332X	CMF RESISTOR	3.3kΩ,1/10W
		R901	NRSA02J-820X	MG RESISTOR	82Ω,1/10W
		R902	NRSA02J-152X	MG RESISTOR	1.5kΩ,1/10W
		R904	QRE123J-331X	RESISTOR	330Ω,1/2W
		R905	NRSA02J-101X	MG RESISTOR	100Ω,1/10W
		R911	NRSA02J-750X	MG RESISTOR	75Ω,1/10W
		R912	NRSA02J-750X	MG RESISTOR	75Ω,1/10W
		R914	NRSA02J-750X	MG RESISTOR	75Ω,1/10W
		R915	NRSA02J-750X	MG RESISTOR	75Ω,1/10W
		R916	NRSA02J-750X	MG RESISTOR	75Ω,1/10W
		R917	NRSA02J-750X	MG RESISTOR	75Ω,1/10W
		R919	QRE123J-331X	RESISTOR	330Ω,1/2W
		R920	NRSA02J-101X	MG RESISTOR	100Ω,1/10W
		R921	NRSA02J-101X	MG RESISTOR	100Ω,1/10W
		R922	QRE123J-331X	RESISTOR	330Ω,1/2W
		R924	NRSA02J-750X	MG RESISTOR,S5900U/U(C)	75Ω,1/10W
		R925	NRSA02J-750X	MG RESISTOR,S5900U/U(C)	75Ω,1/10W
		R2001	NRSA02J-101X	MG RESISTOR	100Ω,1/10W
		R2003	NRSA02J-101X	MG RESISTOR	100Ω,1/10W
		R2004	NRSA02J-332X	MG RESISTOR	3.3kΩ,1/10W
		R2005	NRSA02J-103X	MG RESISTOR	10kΩ,1/10W
		R2006	NRSA02J-393X	MG RESISTOR	39kΩ,1/10W
		R2007	NRSA02J-393X	MG RESISTOR	39kΩ,1/10W
		R2009	NRSA02J-123X	MG RESISTOR	12kΩ,1/10W
		R2010	NRSA02J-123X	MG RESISTOR	12kΩ,1/10W
		R2013	NRSA02J-682X	MG RESISTOR	6.8kΩ,1/10W
		R2014	NRSA02J-224X	MG RESISTOR	220kΩ,1/10W
		R2015	NRSA02J-181X	MG RESISTOR	180Ω,1/10W
		R2016	NRSA02J-473X	MG RESISTOR	47kΩ,1/10W
		R2017	NRSA02J-153X	MG RESISTOR	15kΩ,1/10W
		R2018	NRSA02J-472X	MG RESISTOR	4.7kΩ,1/10W

#	⚠	REF No.	PART No.	PART NAME, DESCRIPTION	
		R2019	NRSA02J-472X	MG RESISTOR	4.7kΩ,1/10W
		R2053	NRSA02J-472X	MG RESISTOR	4.7kΩ,1/10W
		R2054	NRSA02J-123X	MG RESISTOR,S3900U/U(C)	12kΩ,1/10W
			NRSA02J-153X	MG RESISTOR,S5900U/U(C)	15kΩ,1/10W
		R2055	NRSA02J-3R3X	MG RESISTOR	3.3Ω,1/10W
		R2056	QRE141J-820Y	RESISTOR,S3900U/U(C)	82Ω,1/4W
			QRE141J-101Y	RESISTOR,S5900U/U(C)	100Ω,1/4W
		R2057	NRSA02J-473X	MG RESISTOR	47kΩ,1/10W
		R2058	NRSA02J-183X	MG RESISTOR	18kΩ,1/10W
		R2059	NRSA02J-473X	MG RESISTOR	47kΩ,1/10W
		R2060	NRSA02J-183X	MG RESISTOR	18kΩ,1/10W
		R2061	NRSA02J-273X	MG RESISTOR,S5900U/U(C)	27kΩ,1/10W
		R2062	NRSA02J-3R3X	MG RESISTOR,S5900U/U(C)	3.3Ω,1/10W
		R2063	NRSA02J-151X	MG RESISTOR,S5900U/U(C)	150Ω,1/10W
		R2064	NRSA02J-473X	MG RESISTOR,S5900U/U(C)	47kΩ,1/10W
		R2065	NRSA02J-183X	MG RESISTOR,S5900U/U(C)	18kΩ,1/10W
		R2201	NRSA02J-680X	MG RESISTOR	68Ω,1/10W
		R2204	NRSA02J-0R0X	MG RESISTOR	0Ω,1/10W
		R2205	NRSA02J-0R0X	MG RESISTOR	0Ω,1/10W
		R2206	NRSA02J-101X	MG RESISTOR	100Ω,1/10W
		R2207	NRSA02J-332X	MG RESISTOR	3.3kΩ,1/10W
		R2217	NRSA02J-103X	MG RESISTOR	10kΩ,1/10W
		R2218	NRSA02J-393X	MG RESISTOR	39kΩ,1/10W
		R2219	NRSA02J-393X	MG RESISTOR	39kΩ,1/10W
		R2223	NRSA02J-123X	MG RESISTOR	12kΩ,1/10W
		R2224	NRSA02J-123X	MG RESISTOR	12kΩ,1/10W
		R2232	NRSA02J-680X	MG RESISTOR	68Ω,1/10W
		R2251	QRE141J-102Y	RESISTOR	1kΩ,1/4W
		R3003	NRSA02J-102X	MG RESISTOR	1kΩ,1/10W
		R3005	NRSA02J-102X	MG RESISTOR	1kΩ,1/10W
		R3008	QUY160-100Y	IM BUS WIRE,S5900U/U(C)	
		R3013	NRSA02J-0R0X	MG RESISTOR	0Ω,1/10W
		R3017	NRSA02J-102X	MG RESISTOR	1kΩ,1/10W
		R3018	NRSA02J-102X	MG RESISTOR	1kΩ,1/10W
		R3021	NRSA02J-102X	MG RESISTOR	1kΩ,1/10W
		R3022	NRSA02J-102X	MG RESISTOR	1kΩ,1/10W
		R3028	NRSA02J-102X	MG RESISTOR	1kΩ,1/10W
		R3035	NRSA02J-102X	MG RESISTOR	1kΩ,1/10W
		R3043	NRSA02J-0R0X	MG RESISTOR	0Ω,1/10W
		R3058	NRSA02J-102X	MG RESISTOR	1kΩ,1/10W
		R3060	NRSA02J-102X	MG RESISTOR	1kΩ,1/10W
		R3078	NRSA02J-102X	MG RESISTOR	1kΩ,1/10W
		R3088	NRSA02J-102X	MG RESISTOR	1kΩ,1/10W
		R3090	NRSA02J-102X	MG RESISTOR	1kΩ,1/10W
		R3094	NRSA02J-102X	MG RESISTOR	1kΩ,1/10W
		R3095	NRSA02J-0R0X	MG RESISTOR	0Ω,1/10W
		R3096	NRSA02J-102X	MG RESISTOR	1kΩ,1/10W
		R3097	NRSA02J-102X	MG RESISTOR	1kΩ,1/10W
		R3098	NRSA02J-102X	MG RESISTOR	1kΩ,1/10W
		R3099	NRSA02J-102X	MG RESISTOR	1kΩ,1/10W
		R3201	NRSA02J-332X	MG RESISTOR	3.3kΩ,1/10W
		R3206	NRSA02J-103X	MG RESISTOR	10kΩ,1/10W
		R3207	NRSA02J-103X	MG RESISTOR	10kΩ,1/10W
		R3208	NRSA02J-103X	MG RESISTOR	10kΩ,1/10W
		R3209	QRE141J-181Y	RESISTOR	180Ω,1/4W
		R3211	NRSA02J-183X	MG RESISTOR	18kΩ,1/10W
		R3212	NRSA02J-181X	MG RESISTOR	180Ω,1/10W
		R3213	NRSA02J-273X	MG RESISTOR	27kΩ,1/10W
		R3214	NRSA02J-181X	MG RESISTOR	180Ω,1/10W
		R3215	NRSA02J-273X	MG RESISTOR	27kΩ,1/10W
		R3216	QRE141J-474Y	RESISTOR	470kΩ,1/4W

#	⚠	REF No.	PART No.	PART NAME, DESCRIPTION	
		R3217	NRSA02J-334X	MG RESISTOR	330kΩ,1/10W
		R3218	NRSA02J-103X	MG RESISTOR	10kΩ,1/10W
		R3219	QRE141J-103Y	RESISTOR	10kΩ,1/4W
		R3220	NRSA02J-103X	MG RESISTOR	10kΩ,1/10W
		R3221	NRSA02J-562X	MG RESISTOR	5.6kΩ,1/10W
		R3222	NRSA02J-472X	MG RESISTOR	4.7kΩ,1/10W
		R3223	NRSA02J-105X	MG RESISTOR	1MΩ,1/10W
		R3224	NRSA02J-101X	MG RESISTOR	100Ω,1/10W
		R3226	NRSA02J-472X	MG RESISTOR	4.7kΩ,1/10W
		R3227	NRSA02J-472X	MG RESISTOR	4.7kΩ,1/10W
		R3236	NRSA02J-103X	MG RESISTOR	10kΩ,1/10W
		R3237	NRSA02J-103X	MG RESISTOR	10kΩ,1/10W
		R3238	NRSA02J-103X	MG RESISTOR	10kΩ,1/10W
		R3240	NRSA02J-103X	MG RESISTOR	10kΩ,1/10W
		R3241	NRSA02J-103X	MG RESISTOR	10kΩ,1/10W
		R3242	NRSA02J-0R0X	MG RESISTOR	0Ω,1/10W
		R3243	QRE141J-103Y	RESISTOR	10kΩ,1/4W
		R3244	NRSA02J-103X	MG RESISTOR	10kΩ,1/10W
		R4001	NRSA02J-222X	MG RESISTOR	2.2kΩ,1/10W
		R4002	NRSA02J-562X	MG RESISTOR	5.6kΩ,1/10W
		R4003	NRSA02J-222X	MG RESISTOR	2.2kΩ,1/10W
		R4006	NRSA02J-272X	MG RESISTOR	2.7kΩ,1/10W
		R4010	NRSA02J-471X	MG RESISTOR	470Ω,1/10W
		R4011	NRSA02J-471X	MG RESISTOR	470Ω,1/10W
		R4012	NRSA02J-153X	MG RESISTOR	15kΩ,1/10W
		R4018	NRSA02J-103X	MG RESISTOR	10kΩ,1/10W
		R4019	NRSA02J-102X	MG RESISTOR	1kΩ,1/10W
		R4020	NRSA02J-102X	MG RESISTOR	1kΩ,1/10W
		R4021	NRSA02J-103X	MG RESISTOR	10kΩ,1/10W
		R4024	QRE141J-103Y	RESISTOR	10kΩ,1/4W
	⚠	R5001	QRZ9046-475Z	RESISTOR	4.7MΩ,1/2W
		R5101	QRE141J-224Y	RESISTOR	220kΩ,1/4W
		R5102	QRE141J-224Y	RESISTOR	220kΩ,1/4W
		R5103	QRE141J-683Y	RESISTOR	68kΩ,1/4W
		R5104	QRG02GJ-683	OMF RESISTOR	68kΩ,2W
		R5106	QRT01DJ-R39X	MF RESISTOR	0.39Ω,1W
		R5107	QRE121J-331Y	RESISTOR	330Ω,1/2W
		R5108	NRSA02J-122X	MG RESISTOR	1.2kΩ,1/10W
		R5109	NRSA02J-681X	MG RESISTOR	680Ω,1/10W
		R5110	NRSA02J-224X	MG RESISTOR	220kΩ,1/10W
		R5301	NRSA02J-472X	MG RESISTOR	4.7kΩ,1/10W
		R5302	NRSA02J-102X	MG RESISTOR	1kΩ,1/10W
		R5303	NRSA02J-122X	MG RESISTOR	1.2kΩ,1/10W
		R5304	NRSA02J-471X	MG RESISTOR	470Ω,1/10W
		R5305	NRSA02J-102X	MG RESISTOR	1kΩ,1/10W
		R5306	NRSA02J-471X	MG RESISTOR	470Ω,1/10W
		R5308	NRSA02J-471X	MG RESISTOR	470Ω,1/10W
		R5309	NRSA02J-103X	MG RESISTOR	10kΩ,1/10W
		R5310	NRSA02J-471X	MG RESISTOR	470Ω,1/10W
		R5311	NRSA02J-473X	MG RESISTOR	47kΩ,1/10W
		R5312	NRVA02D-332X	CMF RESISTOR	3.3kΩ,1/10W
		R5313	NRVA02D-362X	CMF RESISTOR	3.6kΩ,1/10W
		R5314	NRSA02J-102X	MG RESISTOR	1kΩ,1/10W
		R5316	NRVA02D-822X	CMF RESISTOR	8.2kΩ,1/10W
	⚠	R5318	QRZ9005-221X	FUSI RESISTOR	220Ω,1/4W
		R5326	QUY153-050Y	IM BUS WIRE	
		R5332	QRE141J-222Y	RESISTOR	2.2kΩ,1/4W
		R6020	NRSA02J-102X	MG RESISTOR	1kΩ,1/10W
		R6021	NRSA02J-102X	MG RESISTOR	1kΩ,1/10W
		R6030	NRSA02J-332X	MG RESISTOR	3.3kΩ,1/10W
		R6031	NRSA02J-101X	MG RESISTOR	100Ω,1/10W

#	⚠	REF No.	PART No.	PART NAME, DESCRIPTION	
		R6032	NRSA02J-123X	MG RESISTOR	12kΩ,1/10W
		R6050	QRE141J-330Y	RESISTOR	33Ω,1/4W
		R6051	QRE141J-102Y	RESISTOR	1kΩ,1/4W
		R6508	QUY153-050Y	IM BUS WIRE	
		R6510	NRSA02J-0R0X	MG RESISTOR	0Ω,1/10W
		R6551	NRSA02J-271X	MG RESISTOR	270Ω,1/10W
		R6552	NRSA02J-101X	MG RESISTOR	100Ω,1/10W
		R7001	NRSA02J-103X	MG RESISTOR	10kΩ,1/10W
		R7002	NRSA02J-103X	MG RESISTOR	10kΩ,1/10W
		R7003	NRSA02J-103X	MG RESISTOR	10kΩ,1/10W
		R7004	NRSA02J-103X	MG RESISTOR	10kΩ,1/10W
		R7005	NRSA02J-472X	MG RESISTOR	4.7kΩ,1/10W
		R7006	NRSA02J-471X	MG RESISTOR	470Ω,1/10W
		R7007	NRSA02J-103X	MG RESISTOR	10kΩ,1/10W
		R7008	NRSA02J-563X	MG RESISTOR	56kΩ,1/10W
		R7009	QRE141J-103Y	RESISTOR	10kΩ,1/4W
		R7010	NRSA02J-0R0X	MG RESISTOR	0Ω,1/10W
		R7011	NRSA02J-333X	MG RESISTOR	33kΩ,1/10W
		R7012	QRE141J-333Y	RESISTOR	33kΩ,1/4W
		R7013	NRSA02J-333X	MG RESISTOR	33kΩ,1/10W
		R7014	NRSA02J-333X	MG RESISTOR	33kΩ,1/10W
		R7015	NRSA02J-472X	MG RESISTOR	4.7kΩ,1/10W
		R7016	NRSA02J-103X	MG RESISTOR	10kΩ,1/10W
		R7017	NRSA02J-331X	MG RESISTOR	330Ω,1/10W
		R7018	NRSA02J-331X	MG RESISTOR	330Ω,1/10W
		R7022	NRSA02J-0R0X	MG RESISTOR	0Ω,1/10W
		R7026	QUY160-100Y	IM BUS WIRE	
		R7035	NRSA02J-0R0X	MG RESISTOR	0Ω,1/10W
		R7202	NRSA02J-471X	MG RESISTOR	470Ω,1/10W
		R7203	NRSA02J-222X	MG RESISTOR	2.2kΩ,1/10W
		R7204	QRE123J-100X	RESISTOR	10Ω,1/2W
		B3	NRSA02J-0R0X	MG RESISTOR	0Ω,1/10W
		B6	NRSA02J-0R0X	MG RESISTOR	0Ω,1/10W
		B8	NRSA02J-0R0X	MG RESISTOR	0Ω,1/10W
		B11	NRSA02J-0R0X	MG RESISTOR	0Ω,1/10W
		B33	NRSA02J-0R0X	MG RESISTOR	0Ω,1/10W
		B43	NRSA02J-0R0X	MG RESISTOR	0Ω,1/10W
		B2051	QUY153-050Y	IM BUS WIRE,S3900U/U(C)	
		B3001	NRSA02J-0R0X	MG RESISTOR	0Ω,1/10W
		B5301	NRSA02J-0R0X	MG RESISTOR	0Ω,1/10W
		B5303	NRSA02J-0R0X	MG RESISTOR	0Ω,1/10W
		B5304	NRSA02J-0R0X	MG RESISTOR	0Ω,1/10W
		B5308	NRSA02J-0R0X	MG RESISTOR	0Ω,1/10W
		B6020	NRSA02J-0R0X	MG RESISTOR	0Ω,1/10W
		B6550	QUY160-080Y	IM BUS WIRE	
		B6551	QUY160-080Y	IM BUS WIRE	
		B7002	NRSA02J-0R0X	MG RESISTOR	0Ω,1/10W
		B7003	NRSA02J-0R0X	MG RESISTOR	0Ω,1/10W
		B7004	NRSA02J-0R0X	MG RESISTOR	0Ω,1/10W
		B7005	NRSA02J-0R0X	MG RESISTOR	0Ω,1/10W
		B7006	NRSA02J-0R0X	MG RESISTOR	0Ω,1/10W
		B7007	NRSA02J-0R0X	MG RESISTOR	0Ω,1/10W
		B7013	QUY160-060Y	IM BUS WIRE	
		B7020	NRSA02J-0R0X	MG RESISTOR	0Ω,1/10W
		B7022	NRSA02J-0R0X	MG RESISTOR	0Ω,1/10W
		C1	NCB21HK-103X	CAPACITOR,S3900U/U(C)	0.01μF,50V
			NCF21CZ-105X	CAPACITOR,S5900U/U(C)	1μF,16V
		C2	NCB21HK-103X	CAPACITOR,S3900U/U(C)	0.01μF,50V
			NCF21CZ-105X	CAPACITOR,S5900U/U(C)	1μF,16V
		C3	NCB21HK-103X	CAPACITOR,S3900U/U(C)	0.01μF,50V
			NCF21CZ-105X	CAPACITOR,S5900U/U(C)	1μF,16V

# ⚠ REF No.	PART No.	PART NAME, DESCRIPTION	
C4	NCB21HK-103X	CAPACITOR,S3900U/U(C)	0.01μF,50V
	NCF21CZ-105X	CAPACITOR,S5900U/U(C)	1μF,16V
C5	QEKJ0JM-476	E CAPACITOR	47μF,6.3V
C7	NDC21HJ-151X	CAPACITOR	150pF,50V
C8	NCB21EK-104X	CAPACITOR	0.1μF,25V
C9	NCB21HK-103X	CAPACITOR	0.01μF,50V
C10	NDC21HG-151X	CAPACITOR	150pF,50V
C11	NCB21EK-104X	CAPACITOR	0.1μF,25V
C12	NDC21HJ-7R0X	CAPACITOR	7pF,50V
C14	NCB21EK-104X	CAPACITOR	0.1μF,25V
C15	NCB21HK-103X	CAPACITOR	0.01μF,50V
C16	NCB21EK-104X	CAPACITOR	0.1μF,25V
C17	QEKJ1HM-335	E CAPACITOR	3.3μF,50V
C19	QEKJ0JM-336	E CAPACITOR	33μF,6.3V
C20	QEKJ1HM-105	E CAPACITOR	1μF,50V
C21	NCB21EK-104X	CAPACITOR	0.1μF,25V
C22	QEKJ0JM-476	E CAPACITOR	47μF,6.3V
C23	NCB21HK-103X	CAPACITOR	0.01μF,50V
C24	NCB21EK-104X	CAPACITOR	0.1μF,25V
C25	NDC21HJ-4R0X	CAPACITOR	4pF,50V
C26	NCB21HK-103X	CAPACITOR	0.01μF,50V
C27	NCB21HK-223X	CAPACITOR	0.022μF,50V
C28	QEKJ1HM-335	E CAPACITOR	3.3μF,50V
C29	NCB21HK-472X	CAPACITOR	0.0047μF,50V
C30	QEKJ1HM-474	E CAPACITOR	0.47μF,50V
C31	QEKJ0JM-476	E CAPACITOR	47μF,6.3V
C32	QCBB1HK-103	CAPACITOR	0.01μF,50V
C33	QEKJ1HM-225	E CAPACITOR	2.2μF,50V
C34	NCB21EK-104X	CAPACITOR	0.1μF,25V
C35	NCB21EK-104X	CAPACITOR	0.1μF,25V
C36	QEKJ1HM-475	E CAPACITOR	4.7μF,50V
C37	QEKJ1HM-105	E CAPACITOR	1μF,50V
C38	QEKJ0JM-476	E CAPACITOR	47μF,6.3V
C39	NCB21HK-103X	CAPACITOR	0.01μF,50V
C40	QEKJ1EM-106	E CAPACITOR	10μF,25V
C54	NCB21HK-103X	CAPACITOR	0.01μF,50V
C57	NCB21HK-103X	CAPACITOR	0.01μF,50V
C59	NCB21HK-103X	CAPACITOR	0.01μF,50V
C60	QEKJ0JM-476	E CAPACITOR	47μF,6.3V
C61	NCB21HK-103X	CAPACITOR	0.01μF,50V
C63	NCB21EK-104X	CAPACITOR	0.1μF,25V
C64	NDC21HJ-120X	CAPACITOR	12pF,50V
C69	NCB21HK-103X	CAPACITOR,S3900U/U(C)	0.01μF,50V
C70	NCB21HK-103X	CAPACITOR,S3900U/U(C)	0.01μF,50V
C71	NCB21HK-103X	CAPACITOR	0.01μF,50V
C72	NDC21HJ-470X	CAPACITOR	47pF,50V
C73	NDC21HJ-120X	CAPACITOR	12pF,50V
C74	NDC21HJ-120X	CAPACITOR	12pF,50V
C80	NCB21HK-103X	CAPACITOR	0.01μF,50V
C84	NRSA02J-822X	MG RESISTOR	8.2kΩ,1/10W
C106	NRSA02J-0R0X	MG RESISTOR	0Ω,1/10W
C110	NCB21HK-331X	CAPACITOR	330pF,50V
C137	NCB21HK-103X	CAPACITOR	0.01μF,50V
C201	QEKJ0JM-107	E CAPACITOR	100μF,6.3V
C202	NCB21EK-104X	CAPACITOR	0.1μF,25V
C203	QEKJ1HM-105	E CAPACITOR	1μF,50V
C205	NDC21HJ-101X	CAPACITOR	100pF,50V
C207	NCF21CZ-105X	CAPACITOR	1μF,16V
C220	NDC21HJ-101X	CAPACITOR	100pF,50V
C401	NCB21HK-103X	CAPACITOR,S5900U/U(C)	0.01μF,50V
C402	NCB21HK-223X	CAPACITOR,S5900U/U(C)	0.022μF,50V

# ⚠ REF No.	PART No.	PART NAME, DESCRIPTION	
C403	NDC21HJ-151X	CAPACITOR,S5900U/U(C)	150pF,50V
C404	NDC21HJ-470X	CAPACITOR,S5900U/U(C)	47pF,50V
C406	NCB21HK-681X	CAPACITOR,S5900U/U(C)	680pF,50V
C407	NDC21HJ-180X	CAPACITOR,S5900U/U(C)	18pF,50V
C501	QEKJ1HM-225	E CAPACITOR	2.2μF,50V
C502	QEKJ1HM-104	E CAPACITOR	0.1μF,50V
C503	QEKJ1HM-225	E CAPACITOR	2.2μF,50V
C504	NCB21EK-104X	CAPACITOR	0.1μF,25V
C505	QEKJ1EM-475	E CAPACITOR	4.7μF,25V
C506	NCB21HK-103X	CAPACITOR	0.01μF,50V
C507	QEKJ0JM-476	E CAPACITOR	47μF,6.3V
C508	QEKJ1HM-474	E CAPACITOR	0.47μF,50V
C509	QEKJ1CM-106	E CAPACITOR	10μF,16V
C510	QEKJ0JM-476	E CAPACITOR	47μF,6.3V
C511	NCB21HK-103X	CAPACITOR	0.01μF,50V
C512	NCB21HK-103X	CAPACITOR	0.01μF,50V
C513	QEKJ1EM-475	E CAPACITOR	4.7μF,25V
C514	NCB21HK-103X	CAPACITOR	0.01μF,50V
C515	QCBB1HK-103	CAPACITOR	0.01μF,50V
C516	NCB21HK-103X	CAPACITOR	0.01μF,50V
C517	NCB21HK-103X	CAPACITOR	0.01μF,50V
C518	NCB21EK-104X	CAPACITOR	0.1μF,25V
C519	QERF1HM-225	E CAPACITOR	2.2μF,50V
C520	QERF1EM-475	E CAPACITOR	4.7μF,25V
C521	QEKJ1EM-475	E CAPACITOR	4.7μF,25V
C522	QEKJ1HM-225	E CAPACITOR	2.2μF,50V
C523	QEKJ1HM-225	E CAPACITOR	2.2μF,50V
C524	NDC21HG-301X	CAPACITOR	300pF,50V
C525	NDC21HG-301X	CAPACITOR	300pF,50V
C526	NDC21HJ-101X	CAPACITOR	100pF,50V
C527	NDC21HJ-181X	CAPACITOR	180pF,50V
C528	NDC21HG-271X	CAPACITOR	270pF,50V
C529	NDC21HG-820X	CAPACITOR	82pF,50V
C530	NDC21HG-221X	CAPACITOR	220pF,50V
C531	NDC21HG-301X	CAPACITOR	300pF,50V
C532	NDC21HG-301X	CAPACITOR	300pF,50V
C533	NCB21HK-103X	CAPACITOR	0.01μF,50V
C534	QEKJ0JM-476	E CAPACITOR	47μF,6.3V
C535	NCB21HK-103X	CAPACITOR	0.01μF,50V
C551	QERF1HM-105	E CAPACITOR	1μF,50V
C552	NRSA02J-0R0X	MG RESISTOR	0Ω,1/10W
C553	NCB21HK-103X	CAPACITOR	0.01μF,50V
C555	NRSA02J-0R0X	MG RESISTOR	0Ω,1/10W
C557	QERF1HM-105	E CAPACITOR,S5900U/U(C)	1μF,50V
C558	NRSA02J-0R0X	MG RESISTOR	0Ω,1/10W
C559	NCB21HK-103X	CAPACITOR,S5900U/U(C)	0.01μF,50V
C560	QERF1HM-105	E CAPACITOR	1μF,50V
C561	QERF1HM-105	E CAPACITOR	1μF,50V
C563	NCB21HK-103X	CAPACITOR	0.01μF,50V
C567	NCB21HK-103X	CAPACITOR	0.01μF,50V
C901	QETN0JM-477	E CAPACITOR	470μF,6.3V
C904	NCB21HK-103X	CAPACITOR	0.01μF,50V
C911	NRSA02J-0R0X	MG RESISTOR	0Ω,1/10W
C912	NCB21HK-103X	CAPACITOR	0.01μF,50V
C913	QETN0JM-477	E CAPACITOR	470μF,6.3V
C914	NRSA02J-0R0X	MG RESISTOR,S5900U/U(C)	0Ω,1/10W
C2001	QEKJ1HM-475	E CAPACITOR	4.7μF,50V
C2002	QEKJ1EM-106	E CAPACITOR	10μF,25V
C2003	QEKJ0JM-476	E CAPACITOR	47μF,6.3V
C2005	QEKJ1HM-475	E CAPACITOR	4.7μF,50V
C2006	NCB21HK-123X	CAPACITOR	0.012μF,50V

#	⚠	REF No.	PART No.	PART NAME, DESCRIPTION	
		C2007	QEKJ1CM-226	E CAPACITOR	22μF,16V
		C2008	QEKJ1HM-475	E CAPACITOR	4.7μF,50V
		C2009	NCB21HK-102X	CAPACITOR	0.001μF,50V
		C2010	NCB21HK-222X	CAPACITOR	0.0022μF,50V
		C2011	QEKJ1HM-475	E CAPACITOR	4.7μF,50V
		C2012	QEKJ1HM-475	E CAPACITOR	4.7μF,50V
		C2051	NCB21HK-331X	CAPACITOR	330pF,50V
		C2052	QFLC1HJ-823Z	F CAPACITOR,S3900U/U(C)	0.082μF,50V
			QFLC1HJ-333Z	F CAPACITOR,S5900U/U(C)	0.033μF,50V
		C2053	NCB21HK-332X	CAPACITOR,S5900U/U(C)	0.0033μF,50V
			NCB21HK-472X	CAPACITOR,S3900U/U(C)	0.0047μF,50V
		C2054	NCB21EK-223X	CAPACITOR,S3900U/U(C)	0.022μF,25V
			NCB21HK-103X	CAPACITOR,S5900U/U(C)	0.01μF,50V
		C2055	QEKJ1EM-106	E CAPACITOR	10μF,25V
		C2061	QFLC1HJ-333Z	F CAPACITOR,S5900U/U(C)	0.033μF,50V
		C2062	NCB21HK-332X	CAPACITOR,S5900U/U(C)	0.0033μF,50V
		C2063	NCB21HK-103X	CAPACITOR,S5900U/U(C)	0.01μF,50V
		C2064	QEKJ1EM-106	E CAPACITOR,S5900U/U(C)	10μF,25V
		C2201	NCB21EK-104X	CAPACITOR	0.1μF,25V
		C2202	NCB21EK-333X	CAPACITOR	0.033μF,25V
		C2203	QEKJ1EM-106	E CAPACITOR	10μF,25V
		C2204	NCB21HK-102X	CAPACITOR	0.001μF,50V
		C2205	QEKJ1HM-105	E CAPACITOR	1μF,50V
		C2206	QEKJ1EM-106	E CAPACITOR	10μF,25V
		C2207	QEKJ1CM-476	E CAPACITOR	47μF,16V
		C2208	QEKJ1HM-475	E CAPACITOR	4.7μF,50V
		C2209	QEKJ1HM-104	E CAPACITOR	0.1μF,50V
		C2210	QEKJ1HM-104	E CAPACITOR	0.1μF,50V
		C2215	QEKJ1HM-475	E CAPACITOR	4.7μF,50V
		C2217	QEKJ1EM-106	E CAPACITOR	10μF,25V
		C2219	QEKJ1EM-106	E CAPACITOR	10μF,25V
		C2220	QEKJ1HM-475	E CAPACITOR	4.7μF,50V
		C2221	NCB21HK-103X	CAPACITOR	0.01μF,50V
		C2222	QEKJ1HM-474	E CAPACITOR	0.47μF,50V
		C2223	QEKJ1HM-474	E CAPACITOR	0.47μF,50V
		C2224	NCB21HK-103X	CAPACITOR	0.01μF,50V
		C2225	QEKJ1HM-475	E CAPACITOR	4.7μF,50V
		C2226	QEKJ1EM-106	E CAPACITOR	10μF,25V
		C2227	NCB21EK-104X	CAPACITOR	0.1μF,25V
		C2251	QEKJ0JM-476	E CAPACITOR	47μF,6.3V
		C2252	NCB21HK-103X	CAPACITOR	0.01μF,50V
		C2253	NCB21HK-103X	CAPACITOR	0.01μF,50V
		C2254	NCB21HK-103X	CAPACITOR	0.01μF,50V
		C3001	NCB21EK-104X	CAPACITOR	0.1μF,25V
		C3003	QEKJ1EM-106	E CAPACITOR	10μF,25V
		C3008	NCB21HK-102X	CAPACITOR	0.001μF,50V
		C3013	QEKJ1EM-106	E CAPACITOR	10μF,25V
		C3016	NDC21HJ-180X	CAPACITOR	18pF,50V
		C3017	NDC21HJ-270X	CAPACITOR	27pF,50V
		C3019	NRSA02J-0R0X	MG RESISTOR	0Ω,1/10W
		C3022	NCB21EK-104X	CAPACITOR	0.1μF,25V
		C3023	NCF21CZ-105X	CAPACITOR	1μF,16V
		C3035	NCB21EK-104X	CAPACITOR	0.1μF,25V
		C3036	QERF0JM-107	E CAPACITOR	100μF,6.3V
		C3048	NCB21HK-103X	CAPACITOR	0.01μF,50V
		C4001	NCB21EK-104X	CAPACITOR	0.1μF,25V
		C4002	QERF1HM-105	E CAPACITOR	1μF,50V
		C4004	QERF1AM-336	E CAPACITOR	33μF,10V
		C4006	NCB21EK-563X	CAPACITOR	0.056μF,25V
		C4007	NCB21HK-103X	CAPACITOR	0.01μF,50V
		C4009	NCB21HK-102X	CAPACITOR	0.001μF,50V

#	⚠	REF No.	PART No.	PART NAME, DESCRIPTION	
		C4010	QERF0JM-476	E CAPACITOR	47μF,6.3V
		C4011	NCB21CK-224X	CAPACITOR	0.22μF,16V
		C4014	NDC21HJ-101X	CAPACITOR	100pF,50V
		C4015	NDC21HJ-101X	CAPACITOR	100pF,50V
		C4019	NCB21HK-103X	CAPACITOR	0.01μF,50V
		C4022	NDC21HJ-101X	CAPACITOR	100pF,50V
	⚠	C5001	QFZ9073-683	F CAPACITOR	0.068μF,250V
	⚠	C5004	QCZ9094-472	CAPACITOR	0.0047μF,125V
		C5006	QETM2DM-157	E CAPACITOR	150μF,200V
		C5101	QCZ0212-472	CAPACITOR	0.0047μF,1kV
		C5102	QCZ0339-101Z	CAPACITOR	100pF,1kV
		C5104	QEKJ1HM-105	E CAPACITOR	1μF,50V
		C5105	QFN31HJ-183	F CAPACITOR	0.018μF,50V
		C5107	QFV91HJ-104	F CAPACITOR	0.1μF,50V
		C5201	QEMU0JM-227	E CAPACITOR	220μF,6.3V
		C5202	QETN1CM-108	E CAPACITOR	1000μF,16V
		C5203	QEMT1AM-128	E CAPACITOR	1200μF,10V
		C5204	QETJ2AM-475	E CAPACITOR	4.7μF,100V
		C5205	QETN1HM-106	E CAPACITOR	10μF,50V
		C5206	QETN1AM-476	E CAPACITOR	47μF,10V
		C5207	QETN1CM-107	E CAPACITOR	100μF,16V
		C5301	QEKJ1CM-107	E CAPACITOR	100μF,16V
		C5302	QEKJ1HM-106	E CAPACITOR	10μF,50V
		C5303	QEKJ1CM-107	E CAPACITOR	100μF,16V
		C5304	NCB21HK-102X	CAPACITOR	0.001μF,50V
		C5305	QFV91HJ-154	F CAPACITOR	0.15μF,50V
		C5311	NCB21HK-103X	CAPACITOR	0.01μF,50V
		C6029	NRSA02J-0R0X	MG RESISTOR	0Ω,1/10W
		C7001	QEKJ0JM-476	E CAPACITOR	47μF,6.3V
		C7002	NCB21EK-104X	CAPACITOR	0.1μF,25V
		C7003	QEKJ0JM-476	E CAPACITOR	47μF,6.3V
		C7005	NDC21HJ-470X	CAPACITOR	47pF,50V
		C7006	NDC21HJ-330X	CAPACITOR	33pF,50V
		C7007	QEKJ1HM-106	E CAPACITOR	10μF,50V
		C7008	NCB21HK-102X	CAPACITOR	0.001μF,50V
		C7011	QCFB1HZ-104	CAPACITOR	0.1μF,50V
		C7015	QCFB1HZ-104	CAPACITOR	0.1μF,50V
		C7206	QEKJ0JM-227	E CAPACITOR	220μF,6.3V
		L1	QQL29BJ-100Z	COIL	10μH
		L2	QQL29BJ-101Z	COIL	100μH
		L3	QQL29BJ-100Z	COIL	10μH
		L4	QQL29BJ-100Z	COIL	10μH
		L5	QQL29BJ-100Z	COIL	10μH
		L11	QQL01BJ-120Z	COIL	12μH
		L13	QQL231J-101Y	COIL	100μH
		L15	QQL29BJ-100Z	COIL	10μH
		L18	QUY153-050Y	IM BUS WIRE	
		L19	QQL29BJ-100Z	COIL	10μH
		L20	QQL231J-101Y	COIL	100μH
		L28	QQL231J-150Y	COIL	15μH
		L201	QUY153-050Y	IM BUS WIRE	
		L203	QQL231J-3R3Y	COIL	3.3μH
		L401	QQL231J-150Y	COIL,S5900U/U(C)	15μH
		L402	QUY153-050Y	IM BUS WIRE,S5900U/U(C)	
		L501	QQL29BJ-100Z	COIL	10μH
		L503	QQL29BJ-100Z	COIL	10μH
		L504	QQL29BJ-100Z	COIL	10μH
		L901	QQL29BJ-101Z	COIL	100μH
		L2001	QUY153-050Y	IM BUS WIRE	
		L2251	QQL29BJ-100Z	COIL	10μH
		L4001	QUY153-050Y	IM BUS WIRE	

#	⚠	REF No.	PART No.	PART NAME, DESCRIPTION	
		L5201	PELN1184	COIL	33μH
		L5202	PU60944-330K	COIL	33μH
		L5301	QQL01BJ-101Z	COIL	100μH
		L6001	QQL29BK-1R0Z	COIL	1μH
		L6003	QQL29BK-1R0Z	COIL	1μH
		L6004	QQL071J-1R0Y	COIL	1μH
		L6032	QUY153-050Y	IM BUS WIRE	
		L6050	QUY153-050Y	IM BUS WIRE	
		L7201	QQL29BJ-101Z	COIL	100μH
		X2	QAX0575-001	CRYSTAL RESONATOR	
		X3001	QAX0526-001	CRYSTAL RESONATOR	
		S3001	QSW0602-004	PUSH SWITCH,REC SAFETY	
		S3002	QSW0695-001	PUSH SWITCH,S CASS	
		S7001	QSW0456-002Z	TACT SWITCH,POWER	
		S7002	QSW0456-002Z	TACT SWITCH,REC LINK	
		S7004	QSW0456-002Z	TACT SWITCH,SP/EP,S3900U/U(C)	
			QSW0456-002Z	TACT SWITCH,INSERT,S5900U/U(C)	
		S7006	QSW0456-002Z	TACT SWITCH,DISPLAY,S3900U/U(C)	
			QSW0456-002Z	TACT SWITCH,A.DUB,S5900U/U(C)	
		S7008	QSW0456-002Z	TACT SWITCH,PLAY	
		S7010	QSW0456-002Z	TACT SWITCH,E.PROG	
		S7011	QSW0456-002Z	TACT SWITCH,REC	
		S7013	QSW0456-002Z	TACT SWITCH,PAUSE	
		S7015	QSW0456-002Z	TACT SWITCH,STOP/EJECT	
		S7016	QSW0456-002Z	TACT SWITCH,SVHS ET	
		K2251	NRSA02J-0R0X	MG RESISTOR	0Ω,1/10W
		K2252	NRSA02J-0R0X	MG RESISTOR	0Ω,1/10W
		K2253	NRSA02J-0R0X	MG RESISTOR	0Ω,1/10W
		K5101	QQR0678-001Z	FERRITE BEAD	
		K5102	QQR0678-001Z	FERRITE BEAD	
		PC3001	GP3S123	IC(PHOTO SENSOR	
		PC3002	GP3S123	IC(PHOTO SENSOR	
	⚠	PC5101	PS2501-1	PH COUPLER	
		T2051	PELN0832	OSC TRANSFORMER,S3900U/U(C)	
			PELN0860	OSC TRANSFORMER,S5900U/U(C)	
		T2052	PELN0861	OSC TRANSFORMER,S5900U/U(C)	
	⚠	T5001	QQS0031-002	SW TRANSFORMER	
		ET1	LP30859-001A	EARTH PLATE	
		HD1	PQ35479-1-4	HOLDER(FDP),DI7001	
		HS1	LP40090-001A	HEAT SINK,Q5101	
	⚠	CD1	QMPD340-165-K	POWER CORD	
		SD1	LP30864-001A	SHIELD CASE(PRE)	
		DI7001	QLF0031-001	FL TUBE	
		TU6001	QAU0207-001	TUNER	
		OT1	QYTDSF3010M	SCREW,X2	
		OT2	QYTDST3006Z	SCREW,Q5101	
		J1	QNN0380-002	PIN JACK,REAR1 IN	
		J2	QNN0286-002	PIN JACK,REAR OUT	
		J4	QND0076-001	S JACK,REAR S IN	
		J5	QND0076-001	S JACK,S_OUT	
	⚠	TB1	LP20887-009A	TERMINAL BOARD	
		FC5001	QNG0006-001Z	FUSE CLIP,F5001	
		FC5002	QNG0006-001Z	FUSE CLIP,F5001	
		FW3001	QUM022-13A4A4	PARA RIBON WIRE	
		FW3002	QUM022-30A4A4	PARA RIBON WIRE	
		J7101	QNN0381-001	PIN JACK,FRONT IN	
	⚠	LF5002	QQR0532-001	LINE FILTER	
	⚠	VA5001	QAF0023-431Z	VARISTOR	
		CN1	QGF1028C1-11	FPC CONNECTOR,(1-11)U.DRUM,S3900U/U(C)	
			QGF1028C1-13	FPC CONNECTOR,(1-13)U.DRUM,S5900U/U(C)	
		CN2001	QGF1207C1-07	FPC CONNECTOR,(1-7)A/C HEAD	
		CN2002	QGB2532J1-02	CONNECTOR,(1-2)FE HEAD	
		CN3001	QGB2015M2-08	CONNECTOR,(1-8)CAPSTAN MOTOR	
		CN3002	QGF1207C1-05	FPC CONNECTOR,(1-5)DRUM MDA	
		CN3003	QGB2532J1-02	CONNECTOR,(1-2)LOADING MOTOR	
		CN3004	QGB2534J2-04	CONNECTOR,(1-4)ROTARY ENCODER	
		CN7001	QGF1207C1-09	FPC CONNECTOR,(1-9)ADV.JOG	
		CN7103	QGF1207C1-04	FPC CONNECTOR,(1-4)S JACK,S5900U/U(C)	
	⚠	CP4001	ICP-N25	CIRCUIT PROTECTOR	
	⚠	CP5302	ICP-N25	CIRCUIT PROTECTOR	
	⚠	F5001	QMF51N2-1R25J1	FUSE	T1.25A,AC250V

****

2D DIGITAL BOARD ASSEMBLY <05>

#	⚠	REF No.	PART No.	PART NAME, DESCRIPTION	
		PW1	LPA10090-05A	2D DIGITAL BOARD ASSY,S5900U/U(C)	
			LPA10090-06A	2D DIGITAL BOARD ASSY,S3900U/U(C)	
		IC1201	JCP8036	IC	
	⚠	Q1201	2SC1317/RS/-T	TRANSISTOR	
		Q1202	2SA1576A/QR/-X	TRANSISTOR	
			or 2PA1576/R/-X	TRANSISTOR	
		Q1203	2SA1576A/QR/-X	TRANSISTOR	
			or 2PA1576/R/-X	TRANSISTOR	
		Q1204	2SC4081/QRS/-X	TRANSISTOR	
			or 2PC4081/R/-X	TRANSISTOR	
		Q1205	2SC4081/S/-X	TRANSISTOR	
		D1201	RD4.3ES/B3/-T2	ZENER DIODE	
		D1202	QUY153-050Y	IM BUS WIRE	
		R1201	NRSA02J-121X	MG RESISTOR	120Ω,1/10W
		R1202	NRSA02J-101X	MG RESISTOR	100Ω,1/10W
		R1203	NRSA02J-221X	MG RESISTOR	220Ω,1/10W
		R1204	NRSA02J-221X	MG RESISTOR	220Ω,1/10W
		R1205	NRSA02J-102X	MG RESISTOR	1kΩ,1/10W
		R1206	NRSA02J-561X	MG RESISTOR	560Ω,1/10W
		R1207	NRSA02J-562X	MG RESISTOR	5.6kΩ,1/10W
		R1208	NRSA02J-123X	MG RESISTOR	12kΩ,1/10W
		R1209	NRSA02J-180X	MG RESISTOR	18Ω,1/10W
		R1210	NRSA02J-393X	MG RESISTOR	39kΩ,1/10W
		R1211	NRSA02J-103X	MG RESISTOR	10kΩ,1/10W
		R1212	NRSA02J-102X	MG RESISTOR	1kΩ,1/10W
		R1213	NRSA02J-181X	MG RESISTOR	180Ω,1/10W
		R1214	NRSA02J-181X	MG RESISTOR	180Ω,1/10W
		R1215	NRSA02J-102X	MG RESISTOR	1kΩ,1/10W
		R1216	NRSA02J-151X	MG RESISTOR	150Ω,1/10W
		R1217	NRSA02J-151X	MG RESISTOR	150Ω,1/10W
		R1218	NRSA02J-301X	MG RESISTOR	300Ω,1/10W
		R1220	NRSA02J-561X	MG RESISTOR	560Ω,1/10W
		R1222	NRSA02J-471X	MG RESISTOR	470Ω,1/10W
		R1223	NRSA02J-103X	MG RESISTOR	10kΩ,1/10W
		R1224	NRSA02J-561X	MG RESISTOR	560Ω,1/10W
		R1230	NRSA02J-0R0X	MG RESISTOR	0Ω,1/10W
		R1231	NRSA02J-0R0X	MG RESISTOR	0Ω,1/10W
		R1232	NRSA02J-0R0X	MG RESISTOR	0Ω,1/10W
		R1233	NRSA02J-0R0X	MG RESISTOR	0Ω,1/10W
		VR1201	QVZ3521-103Z	V RESISTOR	
		B1204	NRSA02J-0R0X	MG RESISTOR	0Ω,1/10W
		C1201	QEKJ0JM-476	E CAPACITOR	47μF,6.3V

#	⚠	REF No.	PART No.	PART NAME, DESCRIPTION	
		C1211	QEKJ0JM-476	E CAPACITOR	47μF,6.3V
		C1212	NCB21HK-102X	CAPACITOR	0.001μF,50V
		C1213	NCF21EZ-104X	CAPACITOR	0.1μF,25V
		C1214	NCF21CZ-105X	CAPACITOR	1μF,16V
		C1215	QEKJ0JM-476	E CAPACITOR	47μF,6.3V
		C1216	NCF21EZ-104X	CAPACITOR	0.1μF,25V
		C1217	NCF21EZ-104X	CAPACITOR	0.1μF,25V
		C1218	NCF21EZ-104X	CAPACITOR	0.1μF,25V
		C1219	NCF21CZ-105X	CAPACITOR	1μF,16V
		C1220	QEKJ0JM-476	E CAPACITOR	47μF,6.3V
		C1222	NDC21HJ-151X	CAPACITOR	150pF,50V
		C1223	NDC21HJ-680X	CAPACITOR	68pF,50V
		C1225	NDC21HJ-151X	CAPACITOR	150pF,50V
		C1226	NDC21HJ-680X	CAPACITOR	68pF,50V
		C1227	NCB21EK-104X	CAPACITOR	0.1μF,25V
		C1228	QEKJ1EM-475	E CAPACITOR	4.7μF,25V
		C1229	NCB21HK-103X	CAPACITOR	0.01μF,50V
		C1230	NCF21EZ-104X	CAPACITOR	0.1μF,25V
		C1231	NCF21EZ-104X	CAPACITOR	0.1μF,25V
		C1232	NCF21EZ-104X	CAPACITOR	0.1μF,25V
		C1233	QDYB1CM-103Y	CAPACITOR	0.01μF,16V
		C1234	NCF21EZ-104X	CAPACITOR	0.1μF,25V
		C1235	QEKJ0JM-476	E CAPACITOR	47μF,6.3V
		C1236	NCF21EZ-104X	CAPACITOR	0.1μF,25V
		C1237	NCF21EZ-104X	CAPACITOR	0.1μF,25V
		C1238	NDC21HJ-180X	CAPACITOR	18pF,50V
		C1239	NDC21HJ-560X	CAPACITOR	56pF,50V
		C1243	NCB21HK-103X	CAPACITOR	0.01μF,50V
		C1244	QEKJ1EM-475	E CAPACITOR	4.7μF,25V
		C1245	NDC21HJ-150X	CAPACITOR	15pF,50V
		C1246	QEKJ0JM-476	E CAPACITOR	47μF,6.3V
		L1202	QQL29BJ-101Z	COIL	100μH
		L1203	QQL29BJ-101Z	COIL	100μH
		L1204	QQL29BJ-101Z	COIL	100μH
		L1205	QQL071J-2R7Y	COIL	2.7μH
		L1206	QQL071J-2R7Y	COIL	2.7μH
		L1207	QQL29BJ-101Z	COIL	100μH
		L1208	QQL071J-150Y	COIL	15μH
		L1209	QUY153-050Y	IM BUS WIRE	
	⚠	LC1201	QQL29BJ-101Z	COIL	100μH
		SD1	LP30706-001C	SHIELD FRAME(S-VHS)	
		SD2	LP30684-001A	SHIELD CASE(S-VHS),S5900U/U(C)	
		CN1201	QGG2502K1-17	HEADER PIN	

****

A/C HEAD BOARD ASSEMBLY <12>

PW1	LP10122-01A1	A/C HEAD BOARD ASSY
CN1	QGF1208F1-07	FPC CONNECTOR

#	⚠	REF No.	PART No.	PART NAME, DESCRIPTION	

****

DEMOD BOARD ASSEMBLY <14>

PW1	PB11076A	DEMOD BOARD ASSY	
IC1501	UPC1852AGT	IC	
	or UPC1854AGT	IC	
R1501	QRE141J-102Y	RESISTOR	1kΩ,1/4W
R1502	QRE141J-334Y	RESISTOR	330kΩ,1/4W
R1503	QRE141J-124Y	RESISTOR	120kΩ,1/4W
R1504	QRE141J-302Y	RESISTOR	3kΩ,1/4W
R1505	QRE141J-512Y	RESISTOR	5.1kΩ,1/4W
R1506	QRE141J-333Y	RESISTOR	33kΩ,1/4W
R1507	QRE141J-333Y	RESISTOR	33kΩ,1/4W
R1508	QRE141J-392Y	RESISTOR	3.9kΩ,1/4W
R1509	QRE141J-122Y	RESISTOR	1.2kΩ,1/4W
R1510	QRE141J-392Y	RESISTOR	3.9kΩ,1/4W
R1511	QRE141J-122Y	RESISTOR	1.2kΩ,1/4W
R1517	QRE141J-123Y	RESISTOR	12kΩ,1/4W
C1501	QETN1CM-226	E CAPACITOR	22μF,16V
C1502	QETN1HM-104	E CAPACITOR	0.1μF,50V
C1503	QETN1HM-105	E CAPACITOR	1μF,50V
C1504	QETN1HM-475	E CAPACITOR	4.7μF,50V
C1505	QETN1HM-225	E CAPACITOR	2.2μF,50V
C1506	QETN1HM-104	E CAPACITOR	0.1μF,50V
C1507	QFV11HJ-473	F CAPACITOR	0.047μF,50V
C1508	QETN1HM-474	E CAPACITOR	0.47μF,50V
C1509	QETN1HM-104	E CAPACITOR	0.1μF,50V
C1510	QETN1HM-105	E CAPACITOR	1μF,50V
C1511	QETN1HM-105	E CAPACITOR	1μF,50V
C1512	QETN1HM-105	E CAPACITOR	1μF,50V
C1513	QETN1HM-335	E CAPACITOR	3.3μF,50V
C1514	QETN1HM-106	E CAPACITOR	10μF,50V
C1515	QETN1HM-105	E CAPACITOR	1μF,50V
C1516	QETN1HM-106	E CAPACITOR	10μF,50V
C1517	QETN1HM-106	E CAPACITOR	10μF,50V
C1518	QETN1HM-105	E CAPACITOR	1μF,50V
C1521	QETN1HM-106	E CAPACITOR	10μF,50V
BK1	LP40077-001A	BRACKET(BOARD)	
CN1501	QGG2502K1-09	HEADER PIN	

****

S JACK BOARD ASSEMBLY(S5900U/U(C))<36>

PW1	LPA20009-02B	S JACK BOARD ASSY
J7102	QND0084-001	S JACK
CN7108	QGF1209F1-04	FPC CONNECTOR,(1-4)MAIN

****

ADV.JOG BOARD ASSEMBLY <38>

PW1	LPA20013-04B	ADV.JOG BOARD ASSY
UN7002	QSW0905-001	ROTARY ENCODER
CN7004	QGF1209F1-09	FPC CONNECTOR,(1-9)MAIN

#	⚠ REF No.	PART No.	PART NAME, DESCRIPTION	

****

LOADING MOTOR BOARD ASSEMBLY <55>

	PW2	LP10122-01A2	LOADING MOTOR BOARD ASSY
	CN1	QGB2533K1-02	CONNECTOR

****

R.PAUSE BOARD ASSEMBLY <91>

	PW2	LPA10134-03C2	R.PAUSE BOARD ASSY	
	R7156	NRSA02J-101X	MG RESISTOR	100Ω,1/10W
	B7151	NRSA02J-0R0X	MG RESISTOR	0Ω,1/10W
	B7152	NRSA02J-0R0X	MG RESISTOR	0Ω,1/10W
	J7104	PU60612	MINI JACK	

****

C.BOX BOARD ASSEMBLY <92>

	PW3	LPA10134-03C3	C.BOX BOARD ASSY	
	R7155	NRSA02J-101X	MG RESISTOR	100Ω,1/10W
	J7105	PU60612	MINI JACK	

JVC

VIDEO CASSETTE RECORDER

HR-S5900U/5910U
HR-S3900U/3910U

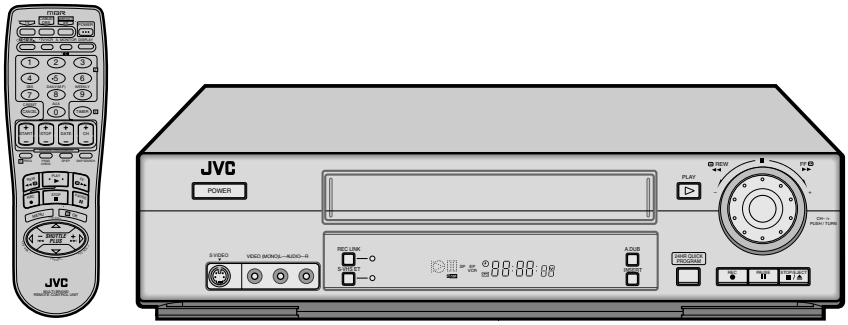

HR-S5900U/5910U

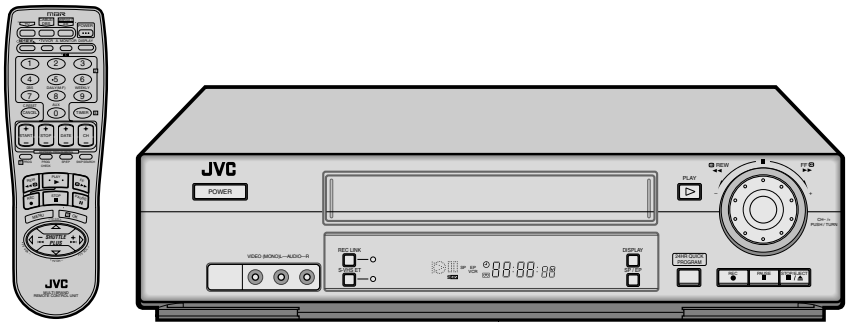

HR-S3900U/3910U

S-VHS
Hi-Fi
VCR Plus+ ®
G3 CABLE BOX CONTROL
Super VHS ET

INSTRUCTIONS

For Customer Use:
Enter below the Model No. and Serial No. which are located on the rear of cabinet. Retain this information for future reference.

Model No. _____

Serial No. _____

LPT0503-001A

Dear Customer,
Thank you for purchasing the JVC S-VHS video cassette recorder. Before use, please read the safety information and precautions contained in the following pages to ensure safe use of your new VCR.

CAUTIONS

CAUTION
RISK OF ELECTRIC SHOCK
DO NOT OPEN

CAUTION: TO REDUCE THE RISK OF ELECTRIC SHOCK.
DO NOT REMOVE COVER (OR BACK).
NO USER-SERVICEABLE PARTS INSIDE.
REFER SERVICING TO QUALIFIED SERVICE PERSONNEL.

The lightning flash with arrowhead symbol, within an equilateral triangle, is intended to alert the user to the presence of uninsulated "dangerous voltage" within the product's enclosure that may be of sufficient magnitude to constitute a risk of electric shock to persons.

The exclamation point within an equilateral triangle is intended to alert the user to the presence of important operating and maintenance (servicing) instructions in the literature accompanying the appliance.

WARNING:
TO PREVENT FIRE OR SHOCK HAZARD, DO NOT EXPOSE THIS UNIT TO RAIN OR MOISTURE.

CAUTION:
This video cassette recorder should be used with AC 120V∿, 60Hz only.
To prevent electric shocks and fire hazards, DO NOT use any other power source.

CAUTION:
TO PREVENT ELECTRIC SHOCK, MATCH WIDE BLADE OF PLUG TO WIDE SLOT, FULLY INSERT.

ATTENTION:
POUR ÉVITER LES CHOCS ÉLECTRIQUES, INTRODUIRE LA LAME LA PLUS LARGE DE LA FICHE DANS LA BORNE CORRESPONDANTE DE LA PRISE ET POUSSER JUSQU'AU FOND.

Note to CATV system installer:
This reminder is provided to call the CATV system installer's attention to Article 820-40 of the NEC that provides guidelines for proper grounding and, in particular, specifies that the cable ground shall be connected to the grounding system of the building, as close to the point of cable entry as practical.

CAUTION:
Changes or modifications not approved by JVC could void user's authority to operate the equipment.

Declaration of Conformity

Model Number	:HR-S5900U HR-S5910U HR-S3900U HR-S3910U
Trade Name	:JVC
Responsible Party	:JVC Americas Corp.
Address	:1700 Valley Road Wayne, N.J. 07470
Telephone Number	:973-315-5000

This device complies with Part 15 of FCC Rules.
Operation is subject to the following two conditions:
(1) This device may not cause harmful interference, and (2) this device must accept any interference received, including interference that may cause undesired operation.

Failure to heed the following precautions may result in damage to the VCR, Remote or video cassette.

1. **DO NOT place the VCR . . .**
   ... in an environment prone to extreme temperatures or humidity.
   ... in direct sunlight.
   ... in a dusty environment.
   ... in an environment where strong magnetic fields are generated.
   ... on a surface that is unstable or subject to vibration.
2. **DO NOT block the VCR's ventilation openings.**
3. **DO NOT place heavy objects on the VCR or on the Remote.**
4. **DO NOT place anything which might spill on the top of the VCR or on the Remote.**
5. **AVOID violent shocks to the VCR during transport.**

VCR Plus+, C^3 and PlusCode are registered trademarks of Gemstar Development Corporation.
The VCR Plus+ system is manufactured under license from Gemstar Development Corporation.

- Cassettes marked "S-VHS" and "VHS" can be used with this video cassette recorder. However, S-VHS recordings are possible only with cassettes marked "S-VHS".
  By using S-VHS ET it is possible to record and play back with S-VHS picture quality on VHS cassettes with this VCR.
- As an ENERGY STAR® Partner, JVC has determined that this product or product model meets the ENERGY STAR® guidelines for energy efficiency.

IMPORTANT PRODUCT SAFETY INSTRUCTIONS

Electrical energy can perform many useful functions. But improper use can result in potential electrical shock or fire hazards. This product has been engineered and manufactured to assure your personal safety. In order not to defeat the built-in safeguards, observe the following basic rules for its installation, use and servicing.

ATTENTION:
Follow and obey all warnings and instructions marked on your product and its operating instructions. For your safety, please read all the safety and operating instructions before you operate this product and keep this booklet for future reference.

INSTALLATION

1. Grounding or Polarization

(A) Your product may be equipped with a polarized alternating-current line plug (a plug having one blade wider than the other). This plug will fit into the power outlet only one way. This is a safety feature.
If you are unable to insert the plug fully into the outlet, try reversing the plug. If the plug should still fail to fit, contact your electrician to replace your obsolete outlet. Do not defeat the safety purpose of the polarized plug.

(B) Your product may be equipped with a 3-wire grounding-type plug, a plug having a third (grounding) pin. This plug will only fit into a grounding-type power outlet. This is a safety feature.
If you are unable to insert the plug into the outlet, contact your electrician to replace your obsolete outlet. Do not defeat the safety purpose of the grounding-type plug.

2. Power Sources

Operate your product only from the type of power source indicated on the marking label. If you are not sure of the type of power supply to your home, consult your product dealer or local power company. If your product is intended to operate from battery power, or other sources, refer to the operating instructions.

3. Overloading

Do not overload wall outlets, extension cords, or integral convenience receptacles as this can result in a risk of fire or electric shock.

4. Power Cord Protection

Power supply cords should be routed so that they are not likely to be walked on or pinched by items placed upon or against them, paying particular attention to cords at plugs, convenience receptacles, and the point where they exit from the product.

5. Ventilation

Slots and openings in the cabinet are provided for ventilation. To ensure reliable operation of the product and to protect it from overheating, these openings must not be blocked or covered.

- Do not block the openings by placing the product on a bed, sofa, rug or other similar surface.
- Do not place the product in a built-in installation such as a bookcase or rack unless proper ventilation is provided or the manufacturer's instructions have been adhered to.

6. Wall or Ceiling Mounting

The product should be mounted to a wall or ceiling only as recommended by the manufacturer.

ANTENNA INSTALLATION INSTRUCTIONS

1. Outdoor Antenna Grounding

If an outside antenna or cable system is connected to the product, be sure the antenna or cable system is grounded so as to provide some protection against voltage surges and built-up static charges. Article 810 of the National Electrical Code, ANSI/NFPA 70, provides information with regard to proper grounding of the mast and supporting structure, grounding of the lead-in wire to an antenna discharge unit, size of grounding connectors, location of antenna discharge unit, connection to grounding electrodes, and requirements for the grounding electrode.

2. Lightning

For added protection for this product during a lightning storm, or when it is left unattended and unused for long periods of time, unplug it from the wall outlet and disconnect the antenna or cable system. This will prevent damage to the product due to lightning and power-line surges.

3. Power Lines

An outside antenna system should not be located in the vicinity of overhead power lines or other electric light or power circuits, or where it can fall into such power lines or circuits. When installing an outside antenna system, extreme care should be taken to keep from touching such power lines or circuits as contact with them might be fatal.

EXAMPLE OF ANTENNA GROUNDING AS PER NATIONAL ELECTRICAL CODE, ANSI/NFPA 70

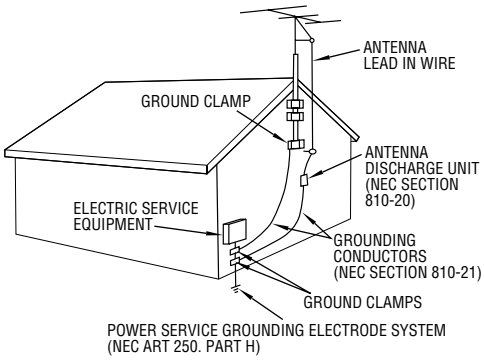

NEC – NATIONAL ELECTRICAL CODE

USE

1. Accessories
To avoid personal injury:
- Do not place this product on an unstable cart, stand, tripod, bracket, or table. It may fall, causing serious injury to a child or adult, and serious damage to the product.
- Use only with a cart, stand, tripod, bracket, or table recommended by the manufacturer or sold with the product.
- Use a mounting accessory recommended by the manufacturer and follow the manufacturer's instructions for any mounting of the product.
- Do not try to roll a cart with small casters across thresholds or deep-pile carpets.

2. Product and Cart Combination
A product and cart combination should be moved with care. Quick stops, excessive force, and uneven surfaces may cause the product and cart combination to overturn.

PORTABLE CART WARNING (Symbol provided by RETAC)

3. Water and Moisture
Do not use this product near water—for example, near a bath tub, wash bowl, kitchen sink or laundry tub, in a wet basement, or near a swimming pool and the like.

4. Object and Liquid Entry
Never push objects of any kind into this product through openings as they may touch dangerous voltage points or short-out parts that could result in a fire or electric shock. Never spill liquid of any kind on the product.

5. Attachments
Do not use attachments not recommended by the manufacturer of this product as they may cause hazards.

6. Cleaning
Unplug this product from the wall outlet before cleaning. Do not use liquid cleaners or aerosol cleaners. Use a damp cloth for cleaning.

7. Heat
The product should be situated away from heat sources such as radiators, heat registers, stoves, or other products (including amplifiers) that produce heat.

SERVICING

1. Servicing
If your product is not operating correctly or exhibits a marked change in performance and you are unable to restore normal operation by following the detailed procedure in its operating instructions, do not attempt to service it yourself as opening or removing covers may expose you to dangerous voltage or other hazards. Refer all servicing to qualified service personnel.

2. Damage Requiring Service
Unplug this product from the wall outlet and refer servicing to qualified service personnel under the following conditions:
a. When the power supply cord or plug is damaged.
b. If liquid has been spilled, or objects have fallen into the product.
c. If the product has been exposed to rain or water.
d. If the product does not operate normally by following the operating instructions. Adjust only those controls that are covered by the operating instructions as an improper adjustment of other controls may result in damage and will often require extensive work by a qualified technician to restore the product to its normal operation.
e. If the product has been dropped or damaged in any way.
f. When the product exhibits a distinct change in performance—this indicates a need for service.

3. Replacement Parts
When replacement parts are required, be sure the service technician has used replacement parts specified by the manufacturer or which have the same characteristics as the original part. Unauthorized substitutions may result in fire, electric shock or other hazards.

4. Safety Check
Upon completion of any service or repairs to this product, ask the service technician to perform safety checks to determine that the product is in safe operating condition.

HOW TO USE THIS INSTRUCTION MANUAL

- The Index on pages 60 – 64 lists frequently-used terms, and the number of the page on which they are used or explained in the manual. This section also illustrates the controls and connections on the front and rear panel, the front display panel and the Remote.
- The ☞ mark signals a reference to another page for instructions or related information.
- Operation buttons necessary for the various procedures are clearly indicated through the use of illustrations at the beginning of each major section.
- **The illustrations used in this instruction manual is of HR-S5900U/5910U, unless mentioned otherwise.**

BEFORE YOU INSTALL YOUR NEW VCR . . .

. . . please read the sections/literature listed below.
- "CAUTIONS" on page 2
- "IMPORTANT PRODUCT SAFETY INSTRUCTIONS" on the previous page

INSTALLING YOUR NEW VCR 6

Basic Connections 6

INITIAL SETTINGS 8

Plug & Play Setting 8
Auto Clock Set/Auto Tuner Set 8
Language Setting 9
Clock Setting 10
Preparations 10
Setting clock semiautomatically
— Semiauto Clock Set 11
Setting clock manually
— Manual Clock Set 12
Tuner Setting 13
Setting channels automatically
— Auto Channel Set 13
Setting channels manually
— Manual Channel Set 14
Cable Box Control Setting 15
Installing Controller 15
Setting cable box output channel & brand 16
DBS Receiver Control Setting 18
Installing Controller 18
Setting DBS receiver output channel & brand 19

BASIC PLAYBACK AND RECORDING 21

Basic Playback 21
To stop playback 21
To rewind the tape 21
To fast-forward the tape 21
To eject the tape 21
To turn off the VCR 21
Basic Playback Features 22
Changing display information 22
Checking tape position 22
Playing back tape repeatedly — Repeat Play 22
Adjusting tracking condition
— Tracking Adjustments 23
Selecting monitor sound — Audio Monitor 23
Automatic operations after rewinding
— Next Function Memory 23
Locating beginning of recordings
— Index Search 24
Locating beginning of timer recordings
— Instant Review 24
Basic Recording 25
To pause recording 25
To stop recording 25
To rewind the tape (when it is not running) 25
To fast-forward the tape (when it is not running) 25
To eject the tape 25
To turn off the VCR 25
Basic Recording Features 26
Changing display information 26
Specifying recording length
— Instant Timer Recording (ITR) 26
Watching one program while recording another 26
Showing on-screen display 27
Recording on VHS tapes with S-VHS quality
— Super VHS ET 27

SPECIAL EFFECT PLAYBACK 28

Special Effect Playback 28
Locating particular scene rapidly
— Picture Search 28
Viewing still picture — Still Picture Playback 29
Skipping unwanted portions — Skip Search 29
Viewing still picture frame by frame
— Frame-by-Frame Playback 29
Viewing slow motion picture
— Slow Motion Playback 29

TIMER RECORDING 30

VCR Plus+® Timer Programing 30
Changing VCR Plus+® Setting 32
Express Timer Programing 34
24HR Quick Programing 36
Checking program settings 37
Canceling or changing program settings 37
When programs overlap each other 38

OTHER USEFUL FUNCTIONS 39

Useful Function Settings 39
Satellite Auto Recording 44
Child Lock 45

EDITING 46

Edit From Camcorder 46
Edit To Or From Another VCR 48
Audio Dubbing
(ONLY FOR HR-S5900U/5910U) 49
Insert Editing and AV Dubbing
(ONLY FOR HR-S5900U/5910U) 50

MULTI-BRAND REMOTE CONTROL 52

TV Brand Setting 52
Cable Box Brand Setting 53
DBS Receiver Brand Setting 54
Changing Remote Control Code 55

TROUBLESHOOTING 56

Questions and answers 59

INDEX 60

List of terms 60
Front panel (HR-S5900U/5910U) 61
Front panel (HR-S3900U/3910U) 61
Front display panel 62
Rear panel 63
On-screen display 63
Remote 64

SPECIFICATIONS 65

FOR SERVICING (Only in U.S.A.) 66

WARRANTY (Only in U.S.A.) 67

Basic Connections

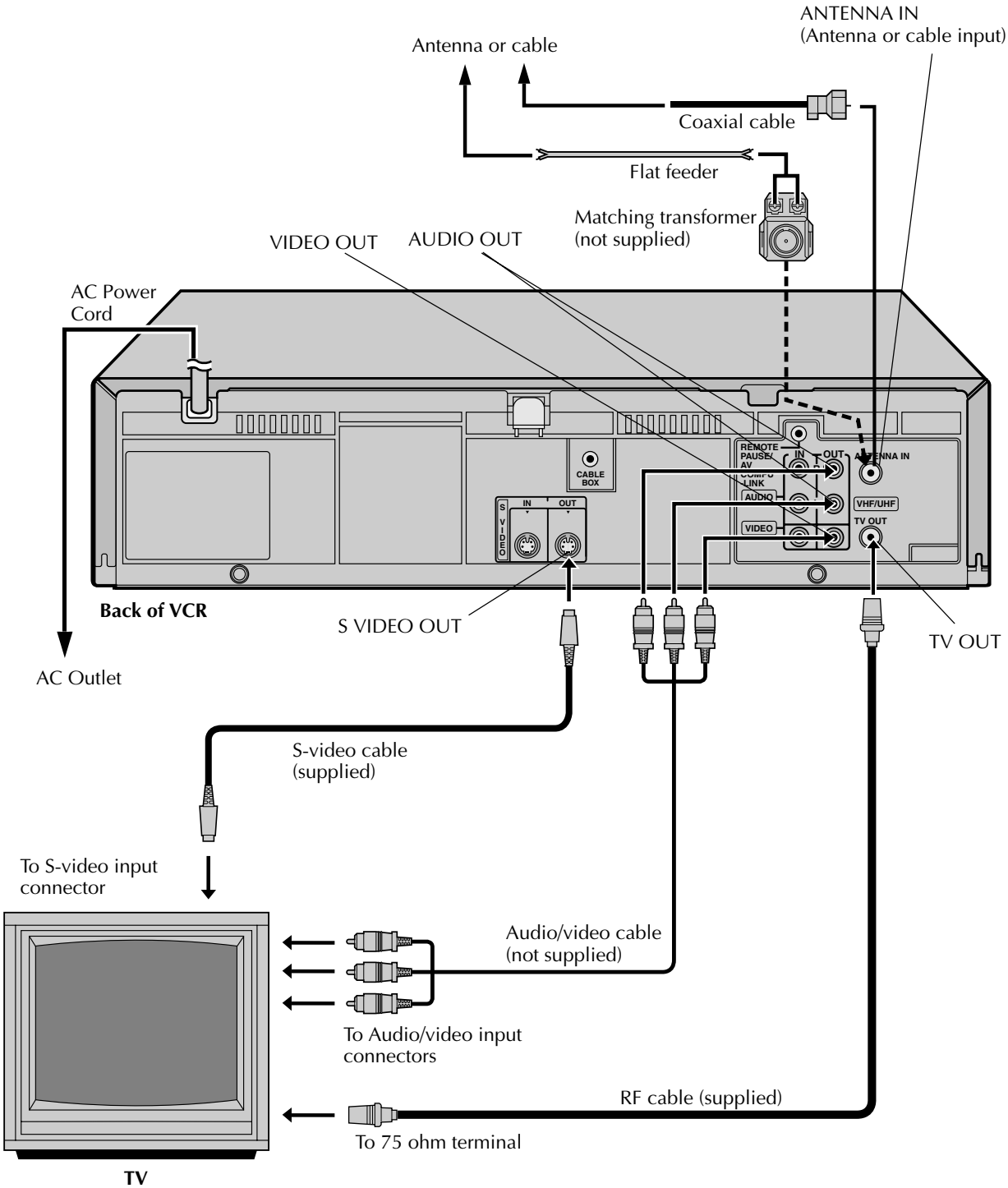

1 Check contents

Make sure the package contains all of the accessories listed in "SPECIFICATIONS" (☞ pg. 65).

2 Situate VCR

Place the VCR on a stable, horizontal surface.

3 Connect VCR to TV

The following connections are required.

RF Connection

❶ Disconnect the TV antenna from the TV.
❷ Connect the TV antenna cable to the ANTENNA IN terminal on the rear of the VCR.
❸ Connect the supplied RF cable between the TV OUT terminal on the rear of the VCR and the TV's antenna input terminal.

AV Connection (improves picture quality during tape playback.)

If your TV is equipped with audio/video input connectors

❶ Connect the antenna, VCR and TV as shown in the illustration.
❷ Connect an audio/video cable between the AUDIO/VIDEO OUT connectors on the rear of the VCR and the audio/video input connectors on the TV.

S-video Connection (allows you to make the most of the S-VHS picture performance.)

If your TV is equipped with an S-video input connector

❶ Perform "RF Connection" and "AV Connection" above.
❷ Connect an S-video cable between the S VIDEO OUT connector on the rear of the VCR and the S-video input connector on the TV.

4 Connect VCR to power source

Connect the AC power plug to an AC outlet.

- The clock and tuner channels will automatically be set when the antenna is connected and when the AC power cord is first connected to an AC power outlet (☞ pg. 8). (If "Auto" or "CH" is displayed on the front display panel before the VCR is turned on, the clock and tuner channels are being set automatically. Wait until the clock time is displayed on the front display panel before turning on the VCR.)

5 Set VCR channel

Press **POWER** to turn off the VCR and press **STOP/EJECT (■/⏏)** on the front panel for more than 5 seconds. "3CH" appears on the display panel. Press **CH +** and **–** on the Remote to select "3CH" or "4CH" for only RF connection, "–CH" (OFF) for RF and AV connection, then press **OK**.

- The VCR channel is preset to 3CH. Set to 4CH if 3CH is used for broadcasting in your area. (To view the picture from this VCR through this channel, select the same channel on the TV with the VCR channel setting on the VCR.)
- You can now perform basic playback (☞ pg. 21) or basic recording (☞ pg. 25).

NOTES:

- *The VCR channel is the channel on which you can watch the picture from the VCR on the TV when only using the RF connection.*
- *Even if you are using audio/video cables to connect your VCR to your TV, you must also connect it using the RF cable. This will ensure that you can record one show while watching another (☞ pg. 26).*
- *For full identification of the VCR's rear panel, refer to the Index (☞ pg. 63).*

Plug & Play Setting

Auto Clock Set/Auto Tuner Set

ATTENTION
- If you use a cable box, Plug & Play will not function; set the clock and tuner channels separately. (☞ pg.10 – 14)
- It takes several minutes for the VCR to complete the Plug & Play setting.
- Do not press any buttons on the front panel or on the Remote while Plug & Play is in progress.

This VCR sets the clock and tuner channels automatically when AC power cord is first connected to an AC outlet. The antenna cable must be connected for the Plug & Play setting.
The time and date can be set automatically by the clock setting data transmitted from one of the regular TV broadcast channels. We call this TV channel the "host channel" and it is a PBS channel in your area.

1 Perform Plug & Play setup

Connect the antenna cable to the VCR (☞ pg. 6). Then connect the AC power cord to an AC outlet. Do not turn on the VCR.
The clock and tuner channels will be set automatically.

NOTES:
- *Auto Clock Set is performed first.*
  "Auto" blinks on the front display panel during Auto Clock Set.
- *Auto Channel Set is performed next. Auto Channel Set scans all the channels that are receivable by your VCR. During Auto Channel Set, the channel numbers are displayed as they are scanned and set.*
- *When Plug & Play setting has been complete successfully, the correct clock time is displayed. If you perform Plug & Play setting successfully, there is no need to perform the clock (☞ pg. 10) and tuner (☞ pg. 13) settings. If, however, you want to add or delete channels, refer to Manual Channel Set on page 14.*

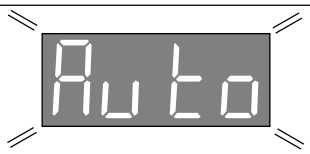

During Initial Auto Clock Set
"Auto" blinks.

During Auto Channel Set
The channel numbers are displayed as they are scanned and set.

Plug & Play Completed
The current time (including AM/PM) is displayed.

*** If an incorrect clock time or "– –:– –" appears on the display panel, see "What to do if Plug & Play setting failed" below.**

INFORMATION
- If "AUTO CLOCK" is set to "ON" on the Clock Set screen on page 11, the clock will be adjusted automatically by the host channel every hour (except 11:00 PM, midnight, 1:00 AM and 2:00 AM) using the incoming PBS channel clock setting data. (This automatic clock adjustment can only be performed when the VCR is turned off. The clock will be adjusted just on these hours — on the time displayed on the front display panel, not on the actual real time.)
  The default setting of "AUTO CLOCK" is "ON".
- If the memory backup fails, because a power outage occurs or because the AC power cord is unplugged, Plug & Play will be performed when power is restored to the VCR.
- Poor antenna or cable signal may prevent the VCR from receiving the Auto clock setting data from the PBS channel. If this function is taking a considerable amount of time, it may be necessary to perform the Semiauto or Manual Clock Set procedure.

What to do if Plug & Play setting failed
- If an incorrect time is displayed on the front display panel, you may be receiving the clock setting data of a PBS channel from an adjacent time zone, or an incorrect PBS channel from a cable TV system. In this case, perform the Semiauto (☞ pg. 11) or Manual Clock Set (☞ pg. 12) procedure.
- If "- -:- -" appears on the front display panel, your antenna cable may not be connected to the VCR or there may not be a Host PBS signal available in your area. Ensure that the antenna cable is connected correctly. Then turn on and off the VCR; the Plug & Play setting will be automatically reactivated.
  If Plug & Play setting is not performed though the antenna cable is connected correctly, perform Manual Clock Set (☞ pg. 12) and Auto Channel Set or Manual Channel Set (☞ pg. 13 or 14).

Language Setting

Turn on the VCR and the TV, and select the VCR channel 3 or 4 (or AV mode) on the TV.

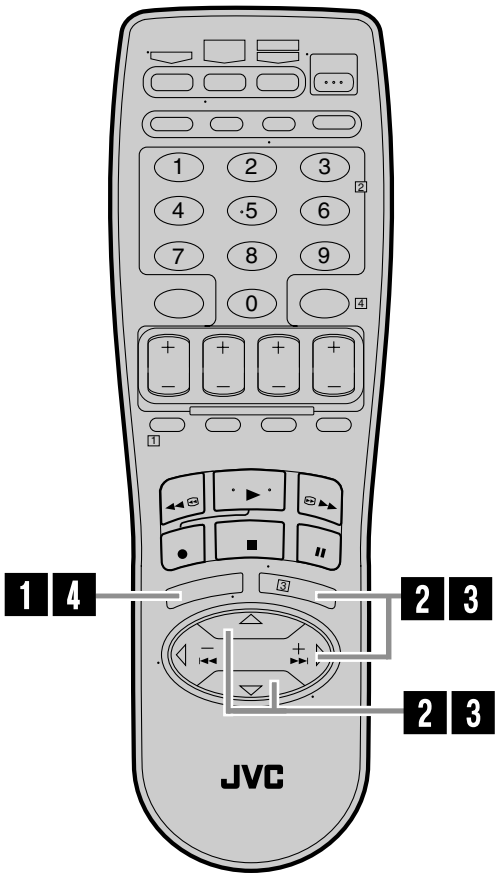

This VCR offers you the language choice to view menus and some messages (excluding the on-screen display superimposed on the TV screen) — in English, Spanish or French.
Select the desired language using the following procedure. The default setting is "ENGLISH".

1 Access Main Menu screen

Press **MENU**.

2 Access Initial Set screen

Press **SHUTTLE PLUS** △▽ to move the highlight bar (arrow) to "INITIAL SET", then press **OK** or **SHUTTLE PLUS** ▷.

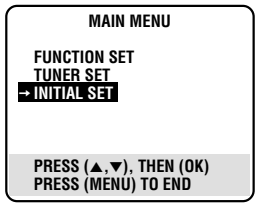

3 Select language

Press **SHUTTLE PLUS** △▽ to move the highlight bar (arrow) to "LANGUAGE", then press **OK** or **SHUTTLE PLUS** ▷ repeatedly until the desired language is selected.

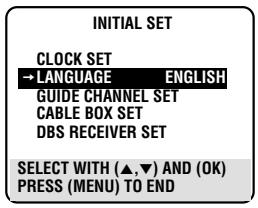

4 Return to normal screen

Press **MENU**.

Clock Setting

Turn on the VCR and the TV, and select the VCR channel 3 or 4 (or AV mode) on the TV.

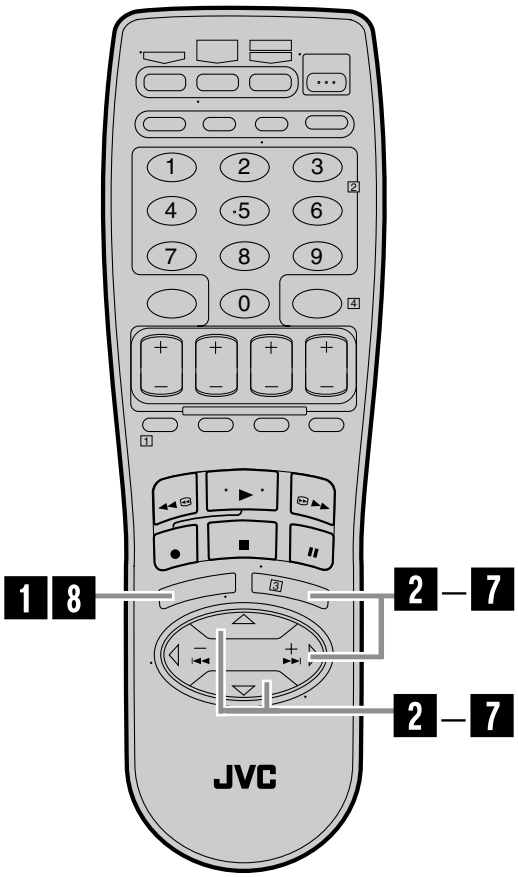

Perform clock setting only if the clock has not been set correctly by the Plug & Play setting or if you use a cable box.
Access the Clock Set screen to perform the Semiauto or Manual Clock Set. Each procedure starts from step 4 after preparation steps below are finished.
If you use a cable box, set the clock manually. (☞ pg. 12)

Preparations

1 Access Main Menu screen

Press **MENU**.

2 Access Initial Set screen

Press **SHUTTLE PLUS** △▽ to move the highlight bar (arrow) to "INITIAL SET", then press **OK** or **SHUTTLE PLUS** ▷.

MAIN MENU
FUNCTION SET
TUNER SET
→ INITIAL SET
PRESS (▲,▼), THEN (OK)
PRESS (MENU) TO END

3 Select clock set

Press **SHUTTLE PLUS** △▽ to move the highlight bar (arrow) to "CLOCK SET", then press **OK** or **SHUTTLE PLUS** ▷.

INITIAL SET
→ CLOCK SET
LANGUAGE ENGLISH
GUIDE CHANNEL SET
CABLE BOX SET
DBS RECEIVER SET
SELECT WITH (▲,▼) AND (OK)
PRESS (MENU) TO END

- "CABLE BOX USERS SET CLOCK MANUALLY" appears on the screen for about 5 seconds, then the Clock Set screen appears.

Setting clock semiautomatically

— Semiauto Clock Set

You can change the host channel/D.S.T. /time zone setting manually.
First follow steps 1 to 3 on page 10, then go to the following steps.

4 Set Auto Clock to ON

Press **SHUTTLE PLUS** ▷ to move the highlight bar to "AUTO CLOCK", then press **SHUTTLE PLUS** △▽ so that "ON" is selected.

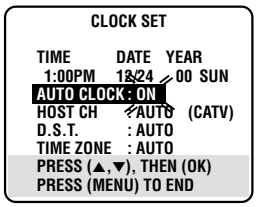

Then;
To select the host channel — go to step 5.
To select the D.S.T. mode — go to step 6.
To select the time zone — go to step 7.

NOTE:
The time set previously will be erased when "AUTO CLOCK", "HOST CH", "D.S.T." or "TIME ZONE" setting is changed.

5 Select host channel

You can either select "AUTO" or enter a PBS channel number.
Press **SHUTTLE PLUS** ▷ to move the highlight bar to "HOST CH", then press **SHUTTLE PLUS** △▽ until "AUTO" or the desired PBS channel number is selected.

NOTE:
Some PBS channels do not transmit clock setting data.

6 Select D.S.T. mode

You have three choices:

AUTO– Select if you want to adjust your VCR's clock automatically by the incoming signal from the host channel. (Auto Daylight Saving Time*)

ON– Adjustment will be made by the built-in clock itself.

OFF– Select when Daylight Saving Time does not apply to you.

Press **SHUTTLE PLUS** ▷ to move the highlight bar to "D.S.T.", then press **SHUTTLE PLUS** △▽ repeatedly until the desired setting is selected.

7 Select time zone

You can select the time zone automatically or manually.
Press **SHUTTLE PLUS** ▷ to move the highlight bar to "TIME ZONE", press **SHUTTLE PLUS** △▽ repeatedly until "AUTO" or the desired time zone is selected.
Each time you press the button, the time zone changes as follows:

→ AUTO → ATLANTIC → EASTERN
→ CENTRAL → MOUNTAIN → PACIFIC
→ ALASKA → HAWAII → (back to the beginning)

NOTE:
If an incorrect clock time is displayed by the Plug & Play setting, you may be receiving the clock setting data of a PBS channel from an adjacent time zone or from an incorrect PBS channel from a cable TV system. If you selected "AUTO" for the host channel in step 5, be sure to select the correct time zone manually.

8 Return to normal screen

Press **MENU**.

*** Auto Daylight Saving Time**
This function enables automatic adjustment of the VCR's clock at the start and end of Daylight Saving Time.
With Auto DST activated, . . .
. . . on the first Sunday of April at 2:00 AM, the clock is adjusted to 3:00 AM.
. . . on the last Sunday of October at 2:00 AM, the clock is adjusted to 1:00 AM.

IMPORTANT
Turn off the VCR after performing Semiauto Clock Set. "Auto" will appear on the front display panel while the clock is being set. The current clock time will appear automatically when the clock setting is complete.

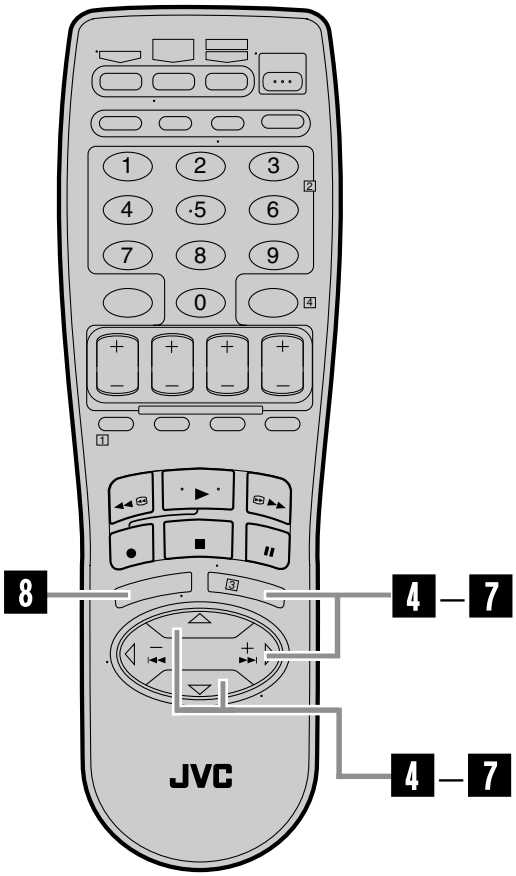

Setting clock manually

— Manual Clock Set

First follow steps 1 to 3 on page 10, then go to the following steps.

4 **Set time**

Press **SHUTTLE PLUS** △▽ until the desired time appears, then press **OK** or **SHUTTLE PLUS** ▷.

```
CLOCK SET

TIME        DATE   YEAR
 --:--AM    1/ 1    00
AUTO CLOCK : ON
HOST CH    : AUTO   (CATV)
D.S.T.     : AUTO
TIME ZONE  : AUTO
PRESS (▲,▼), THEN (OK)
PRESS (MENU) TO END
```

- Holding **SHUTTLE PLUS** △▽ changes the time in 30-minute intervals.
- When the time is entered manually, "AUTO CLOCK" is automatically set to "OFF", and "HOST CH" and "TIME ZONE" disappear.

5 **Set date**

Press **SHUTTLE PLUS** △▽ until the desired date appears, then press **OK** or **SHUTTLE PLUS** ▷.

- Holding **SHUTTLE PLUS** △▽ changes the date in 15-day intervals.

6 **Set year**

Press **SHUTTLE PLUS** △▽ until the desired year appears, then press **OK** or **SHUTTLE PLUS** ▷ twice.

7 **Select D.S.T. mode**

You can select either "ON" or "OFF".

ON– Adjustment will be made by the built-in clock itself.

OFF– Select when Daylight Saving Time does not apply to you.

Press **SHUTTLE PLUS** △▽ to select the desired setting.

8 **Start clock**

Press **MENU** and normal screen appears.

To make corrections any time during the process

Press **OK** or **SHUTTLE PLUS** ▷ repeatedly until the item you want to change blinks, then press **SHUTTLE PLUS** △▽.

Tuner Setting

Turn on the VCR and the TV, and select the VCR channel 3 or 4 (or AV mode) on the TV.

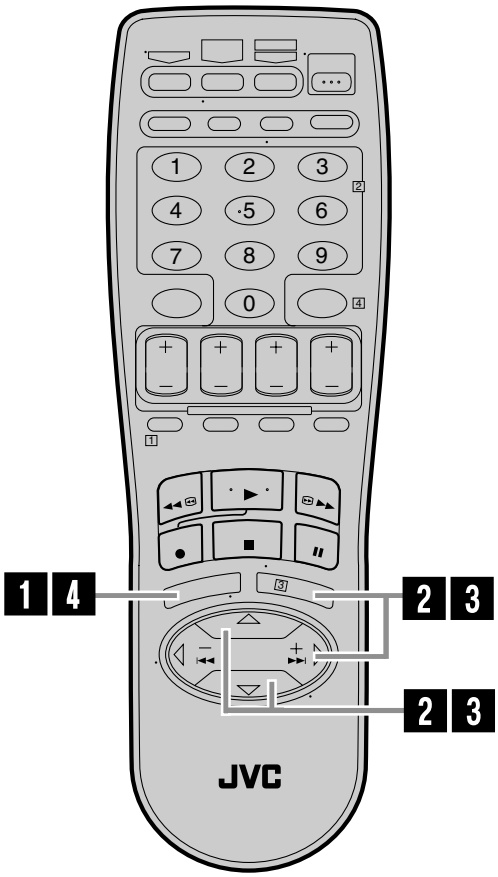

Setting channels automatically — Auto Channel Set

Use Auto Channel Set only if channels have not been set correctly by the Plug & Play setting. If you want to add or delete channels, use Manual Channel Set (☞ pg. 14).

1 Access Main Menu screen

Press **MENU**.

2 Access Tuner Set screen

Press **SHUTTLE PLUS** △▽ to move the highlight bar (arrow) to "TUNER SET", then press **OK** or **SHUTTLE PLUS** ▷.

MAIN MENU
FUNCTION SET
→ TUNER SET
INITIAL SET
PRESS (▲,▼), THEN (OK)
PRESS (MENU) TO END

3 Perform Auto Channel Set

You can automatically set the receivable channels in your area in the order of their frequencies.
Press **SHUTTLE PLUS** △▽ to move the highlight bar (arrow) to "AUTO CHANNEL SET", then press **OK** or **SHUTTLE PLUS** ▷.

TUNER SET
BAND CATV
→ AUTO CHANNEL SET
MANUAL CHANNEL SET
SELECT WITH (▲,▼) AND (OK)
PRESS (MENU) TO END

AUTO CHANNEL SET
SCANNING...
PRESS (MENU) TO END

NOTES:

- *When Auto Channel Set is complete, "SCAN COMPLETED" appears on screen.*
- *If the scan was unsuccessful, "SCAN COMPLETED–NO SIGNAL" appears on screen. Check the connections and start again.*

4 Return to normal screen

Press **MENU**.

INFORMATION

The VCR selects the correct band (TV or CATV) automatically during Auto Channel Set.
The selected band will be displayed on the right side of "BAND" on the Tuner Set screen.

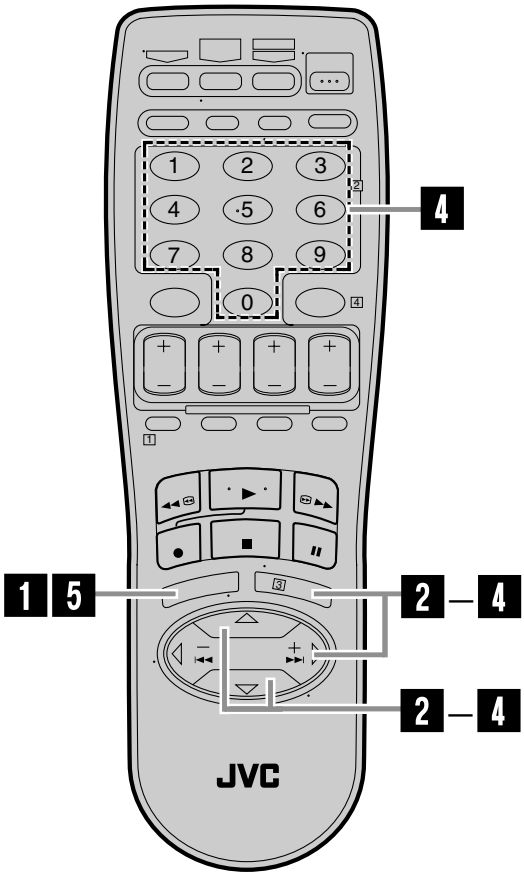

Setting channels manually

— Manual Channel Set

You can add the channels you want or delete the channels you do not want manually.

1 Access Main Menu screen

Press **MENU**.

2 Access Tuner Set screen

Press **SHUTTLE PLUS** △▽ to move the highlight bar (arrow) to "TUNER SET", then press **OK** or **SHUTTLE PLUS** ▷.

3 Access Manual Channel Set screen

Press **SHUTTLE PLUS** △▽ to move the highlight bar (arrow) to "MANUAL CHANNEL SET", then press **OK** or **SHUTTLE PLUS** ▷.

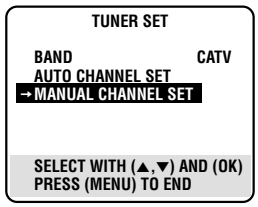

4 Add or skip desired channels

To add channels

❶ Press the **Number** keys to input a channel number you want to add.
❷ Press **OK** or **SHUTTLE PLUS** ▷ to set to "ADD".
❸ Repeat ❶ and ❷ to add other channels.

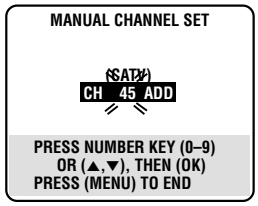

To skip channels

❶ Press the **Number** keys or **SHUTTLE PLUS** △▽ to input a channel number you want to skip.
❷ Press **OK** or **SHUTTLE PLUS** ▷ to set to "SKIP".
❸ Repeat ❶ and ❷ to skip other channels.

5 Return to normal screen

Press **MENU**.

Cable Box Control Setting

Suggested location

Place the cable box on top of the VCR. Attach the VCR's Controller to the top of the VCR with the Controller's transmitter pointed towards the cable box's remote sensor.

ATTENTION:

The Controller can also control a DBS receiver. If both a cable box and a DBS receiver are used, position the Controller so its signal reaches the remote sensors on both the cable box and DBS receiver.

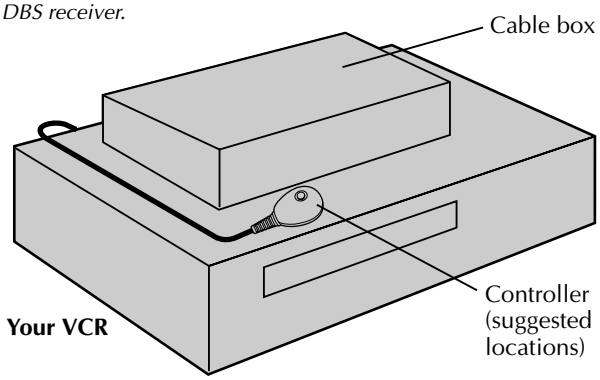

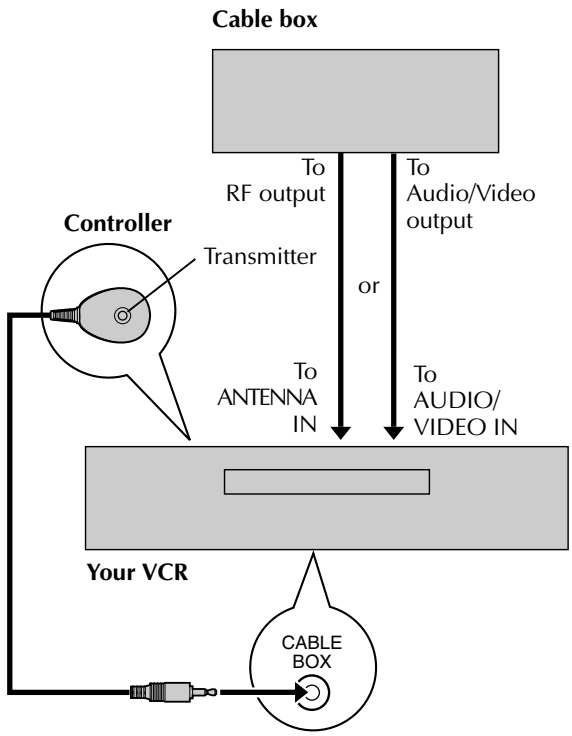

The following procedure is required if you receive your TV channels through a cable box (descrambler). The Controller allows the VCR to automatically switch the cable box channel during timer recording. The Controller is effective for recording broadcasts that have been programmed using VCR Plus+ (☞ pg. 30), Express timer programing (☞ pg. 34) or 24HR quick programing (☞ pg. 36).

NOTE:

The Controller is not supplied with this unit. It can be requested by mailing in the completed JVC Cable Mouse Certificate that is included with the accessory package.

Installing Controller

1 Situate Controller

Place the Controller so that its transmitter is facing the cable box's remote sensor.

- Make sure the path between the Controller and the cable box's remote sensor is not blocked.

2 Attach Controller

Fix securely using the adhesive strip attached on the back of the Controller.

3 Connect cable box to VCR

- ***If your cable box does not have audio/video output connectors***
  Connect the RF output terminal on the cable box to the ANTENNA IN terminal on the rear of your VCR.
- ***If your cable box has audio/video output connectors***
  Connect an audio/video cable between the AUDIO/VIDEO IN connectors on the rear of the VCR and the audio/video output connectors on the cable box.

NOTE:

When connecting your cable box, refer to its instruction manual.

4 Connect Controller to VCR

Connect the Controller to the CABLE BOX Controller connector on the rear panel.

How to control the cable box

This VCR has two separate methods to control your cable box.

- The VCR's wireless Remote can control your cable box. This eliminates the need for a separate cable box's Remote.
- The VCR's Controller can also control your cable box. This allows the VCR to change your cable box's channel number during timer recording.

Each method must be set up separately. To set up the VCR's Remote, refer to page 53. To set up the Controller, go to page 16.

Turn on the VCR and the TV, and select the VCR channel 3 or 4 (or AV mode) on the TV.

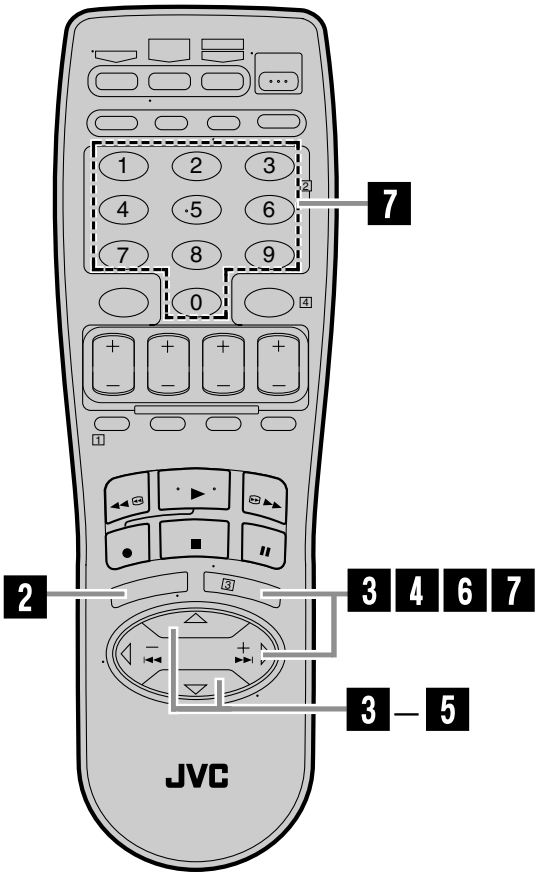

Setting cable box output channel & brand

After installation, set the cable box output's channel and its brand correctly; otherwise, the Controller cannot work correctly.

1 Turn on cable box

Select a channel other than channel 9 on your cable box.

2 Access Main Menu screen on VCR

Press **MENU**.

3 Access Initial Set screen

Press **SHUTTLE PLUS** △▽ to move the highlight bar (arrow) to "INITIAL SET", then press **OK** or **SHUTTLE PLUS** ▷.

4 Access Cable Box Set screen

Press **SHUTTLE PLUS** △▽ to move the highlight bar (arrow) to "CABLE BOX SET", then press **OK** or **SHUTTLE PLUS** ▷.

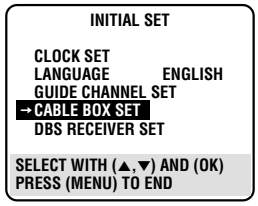

5 Select cable box output channel

Your selection depends on how your cable box is connected to your VCR.

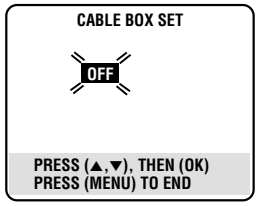

- **If your cable box is connected to your VCR's ANTENNA IN terminal on the rear**
  Press **SHUTTLE PLUS** △▽ on the Remote until the channel number representing the cable box's output (CH2 – CH9) appears on the screen.
- **If your cable box is connected to your VCR's AUDIO/VIDEO IN connectors on the front panel**
  Press **SHUTTLE PLUS** △▽ on the Remote until "ON F-1 (FRONT)" appears on the screen.
- **If your cable box is connected to your VCR's AUDIO/VIDEO IN connectors on the rear panel**
  Press **SHUTTLE PLUS** △▽ on the Remote until "ON L-1 (REAR)" appears on the screen.
- **If you do not use a cable box**
  Press **SHUTTLE PLUS** △▽ on the Remote until "OFF" appears on the screen.

6 Access Cable Box Brand Set screen

Press **OK**.

7 Enter cable box brand

Press the appropriate **Number** keys to enter the brand code from the list shown to the right, then press **OK**.

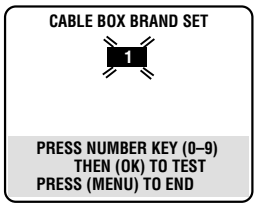

- **If the cable box's channel changes to 9, setting is complete**
  Press **OK** and "CABLE BOX CONTROL IS ON" appears on the screen for about 5 seconds, then it returns to the normal screen.

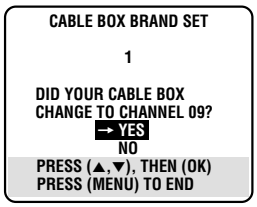

- **If the cable box's channel does not change to 9**
  ① Press **SHUTTLE PLUS** △▽ to move the highlight bar (arrow) to "NO".
  ② Press **OK**.
  ③ Repeat step **7** until the cable box's channel changes to 9 by entering another code.
  ④ If the channel does not change after going through all the code numbers listed for your model of cable box, then try all the other numbers between 1 and 25.

CABLE BOX BRAND LIST

BRAND	CODE
ARCHER	1, 5, 17
CABLETENNA	1, 17
CABLEVIEW	15, 16, 17, 21, 25
CITIZEN	15, 16, 17, 21, 25
CURTIS	2, 8
DIAMOND	1, 17
EASTERN	19
GC BRAND	15, 16, 17, 21, 25
GEMINI	15
GENERAL INSTRUMENTS	1, 4, 6, 11, 12, 15, 28
HAMLIN	10, 18, 19, 23
JASCO	15
JERROLD	1, 4, 6, 11, 12, 15, 28
NOVAVISION	2, 8
OAK	7, 20
PANASONIC	13, 14
PULSER	15, 16, 17, 21, 25
RCA	13, 14
REGAL	10, 18, 19, 23
REGENCY	19
REMBRANDT	1, 16, 17
SAMSUNG	5, 16, 24
SCIENTIFIC ATLANTA	2, 8
SIGMA	7, 20
SL MARX	5, 16, 17, 24, 25
SPRUCER	13, 14
STARGATE	5, 15, 16, 17, 21, 24, 25
TELEVIEW	5, 16, 24
TOCOM	1, 4, 16
UNIKA	1, 17
UNIVERSAL	16, 17, 25
VIDEOWAY	3, 9, 22
ZENITH	3, 9, 22

If the VCR's clock has not been set (with AUTO CLOCK set to ON)

"CABLE BOX USERS SET CLOCK MANUALLY" appears for about 5 seconds when you press **OK** in step **6**, then the Clock Set screen appears.
Perform Manual Clock Set on page 12. If you press **MENU** after the clock has been set, the Cable Box Brand Set screen appears.

NOTES:

- *The Controller may not work with all types of cable box.*
- *If your cable box does not respond to any code between 1 and 25, you cannot use the Controller to change cable box channels. In this case, make sure to leave the cable box turned on and tuned to the proper channel before the scheduled start time of timer recording.*
  Contact your cable company about the possibility of exchanging your current cable box with the one compatible with your VCR.
- *The VCR can only change the cable box channel through the Controller during timer recording.*
- *If your cable box cannot be operated with a remote control (because it has no remote sensor), you cannot use the Controller to change its channels. Make sure to leave the cable box turned on and tuned to the proper channel before the scheduled start time of timer recording.*
- *If the VCR's memory backup expires because of a power failure, set the cable box output channel and brand again.*
- ***For customers in U.S.A.:** If you are unable to set the Controller, contact JVC toll free at 1-800-537-5722.*

DBS Receiver Control Setting

Suggested location

Place the DBS (Direct Broadcast Satellite) receiver on top of the VCR. Attach the VCR's Controller to the top of the VCR with the Controller's transmitter pointed towards the DBS receiver's remote sensor.

ATTENTION:

The Controller can also control a cable box. If both a DBS receiver and a cable box are used, position the Controller so its signal reaches the remote sensors on both the DBS receiver and cable box.

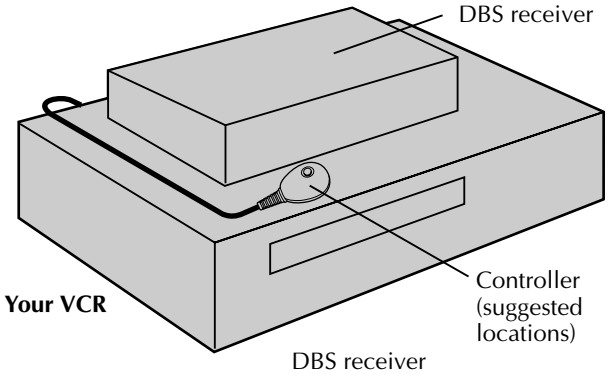

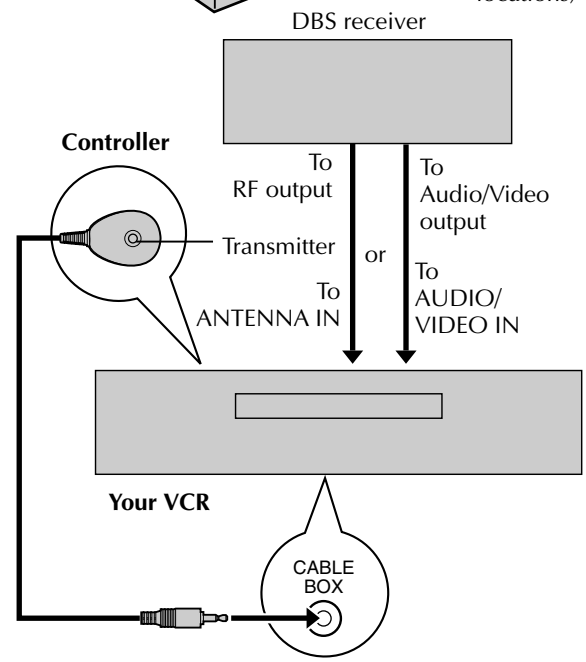

The following procedure is required if you receive satellite channels through a DBS (Direct Broadcast Satellite) receiver. The Controller allows the VCR to automatically switch the DBS receiver's channels during timer recording.

NOTES:

- *The Controller is not supplied with this unit. It can be requested by mailing in the completed JVC Cable Mouse Certificate that is included with the accessory package.*
- *The VCR can automatically change the DBS receiver channels using the Controller when the VCR has been programed using Express timer programing (☞ pg. 34) or 24HR quick programing (☞ pg. 36).*
  Because satellite programing does not use PlusCode, the Controller cannot change the DBS receiver channels during VCR Plus+ timer recording.
- *If a cable box is also used, it is recommended that you connect the DBS receiver to your VCR's audio/video input connectors and the cable box to your VCR's antenna input terminal.*

Installing Controller

1 **Situate Controller**

Place the Controller so that its transmitter is facing the DBS receiver's remote sensor.

- Make sure the path between the Controller and the DBS receiver's remote sensor is not blocked.

2 **Attach Controller**

Fix securely using the adhesive strip attached on the back of the Controller.

3 **Connect DBS receiver to VCR**

- ***If your DBS receiver does not have audio/video output connectors***
  Connect the RF output terminal on the DBS receiver to the ANTENNA IN terminal on the rear of your VCR.
- ***If your DBS receiver has audio/video output connectors***
  Connect an audio/video cable between the AUDIO/VIDEO IN connectors on the rear of the VCR and the audio/video output connectors on the DBS receiver.

NOTE:

When connecting your DBS receiver, refer to its instruction manual.

4 **Connect Controller to VCR**

Connect the Controller to the CABLE BOX Controller connector on the rear panel.

How to control the DBS receiver

This VCR has two separate methods to control your DBS receiver.

- The VCR's wireless Remote can control your DBS receiver. This eliminates the need for a separate DBS receiver's Remote.
- The VCR's Controller can also control your DBS receiver. This allows the VCR to change your DBS receiver's channel number during timer-recording.

Each method must be set up separately. To set up the VCR's Remote, refer to page 54. To set up the Controller, go to page 19.

Turn on the VCR and the TV, and select the VCR channel 3 or 4 (or AV mode) on the TV.

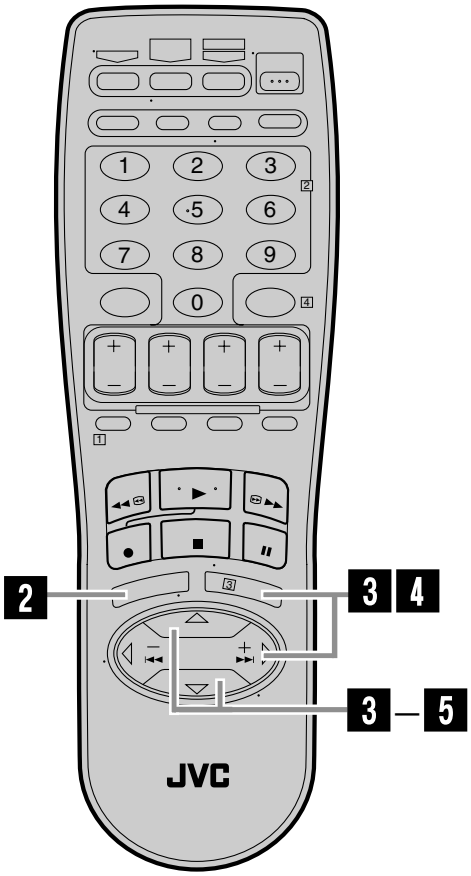

Setting DBS receiver output channel & brand

After installation, set the DBS receiver's output channel and its brand correctly; otherwise, the Controller cannot work correctly.

1 Turn on DBS receiver

Select a channel other than channel 55, 100 or 205 on your DBS receiver.

2 Access Main Menu screen on VCR

Press **MENU**.

3 Access Initial Set screen

Press **SHUTTLE PLUS** △▽ to move the highlight bar (arrow) to "INITIAL SET", then press **OK** or **SHUTTLE PLUS** ▷.

4 Access DBS Receiver Set screen

Press **SHUTTLE PLUS** △▽ to move the highlight bar (arrow) to "DBS RECEIVER SET", then press **OK** or **SHUTTLE PLUS** ▷.

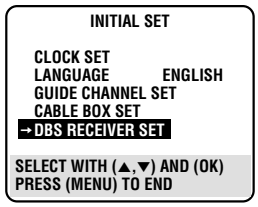

5 Select DBS receiver output channel

Your selection depends on how your DBS receiver is connected to your VCR.

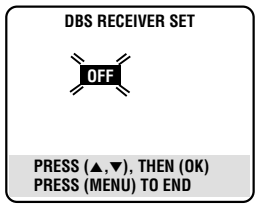

- **If your DBS receiver is connected to your VCR's ANTENNA IN terminal on the rear**
  Press **SHUTTLE PLUS** △▽ on the Remote until the channel number representing the DBS receiver's output (CH3 or CH4) appears on the screen.
- **If your DBS receiver is connected to your VCR's AUDIO/VIDEO IN connectors on the front panel**
  Press **SHUTTLE PLUS** △▽ on the Remote until "ON F-1 (FRONT)" appears on the screen.
- **If your DBS receiver is connected to your VCR's AUDIO/VIDEO IN connectors on the rear panel**
  Press **SHUTTLE PLUS** △▽ on the Remote until "ON L-1 (REAR)" appears on the screen.
- **If you do not use a DBS receiver**
  Press **SHUTTLE PLUS** △▽ on the Remote until "OFF" appears on the screen.

CONTINUED ON NEXT PAGE ➡

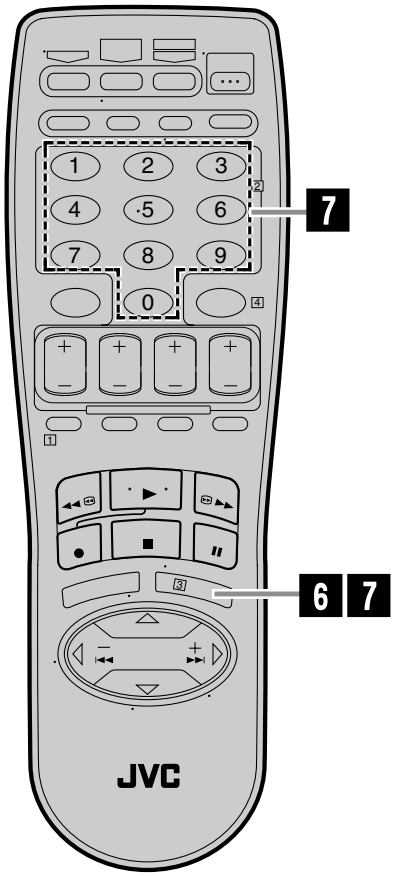

6 Access DBS Receiver Brand Set screen

Press **OK**.

7 Enter DBS Receiver's brand

Press the appropriate **Number** keys to enter the brand code from the following list, then press **OK**.
The program currently received through the DBS receiver appears for about 10 seconds.

DBS RECEIVER BRAND SET
40
PRESS NUMBER KEY (0–9)
THEN (OK) TO TEST
PRESS (MENU) TO END

BRAND	CODE
JVC (DISH Network)	51
ECHOSTAR (DISH Network)	51
PRIMESTAR	50
SONY (DSS)	41
RCA (DSS)	40

- **If the DBS receiver's channel changes to the channel listed below for your brand, setting is complete**

  JVC → 100
  ECHOSTAR → 100
  PRIMESTAR → 55
  SONY → 205
  RCA → 205

  Press **OK** and "DBS RECEIVER CONTROL IS ON" appears on the screen for about 5 seconds, then it returns to the normal screen.

DBS RECEIVER BRAND SET
51
DID YOUR DBS RECEIVER
CHANGE TO CHANNEL 100?
→ YES
NO
PRESS (▲,▼), THEN (OK)
PRESS (MENU) TO END

- **If the DBS receiver's channel does not change as shown above**
  ① Press **SHUTTLE PLUS** △▽ to move the highlight bar (arrow) to "NO".
  ② Press **OK**.
  ③ Re-enter the correct code.

NOTES:

- *The Controller may not work with all types of DBS receiver.*
- *If your DBS receiver does not respond to the code, you cannot use the Controller to change satellite channels. In this case, make sure to leave the DBS receiver turned on and tuned to the proper channel before the scheduled start time of timer recording.*
- *The VCR can only change the satellite channel through the Controller during timer recording.*
- *If your DBS receiver cannot be operated with a remote control (because it has no remote sensor), you cannot use the Controller to change its channels. Make sure to leave the DBS receiver turned on and tuned to the proper channel before the scheduled start time of timer recording.*
- ***For customers in U.S.A.:** If you are unable to set the Controller, contact JVC toll free at 1-800-537-5722.*

Basic Playback

Turn on the VCR and the TV, and select the VCR channel 3 or 4 (or AV mode) on the TV.

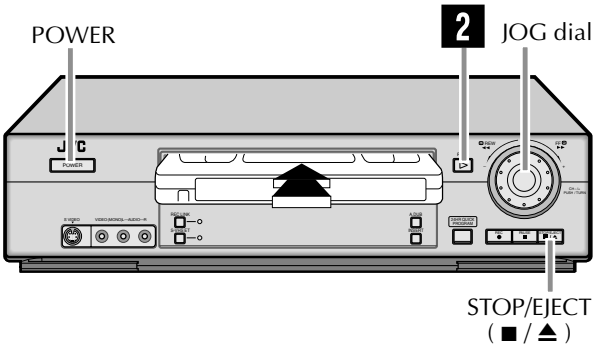

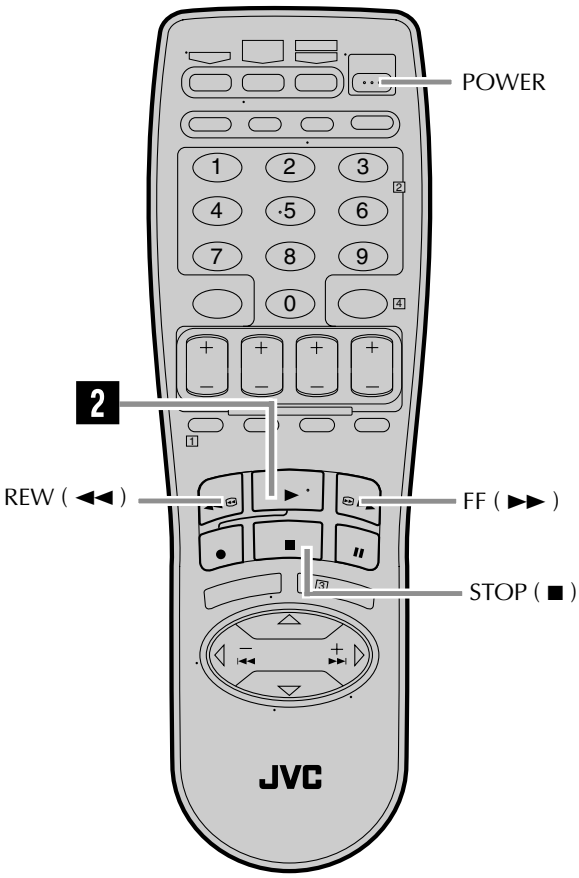

This VCR can check the tape condition during playback (and recording), and realizes the best possible pictures.

1 Load a cassette

Make sure the window side is up, the rear label side is facing you and the arrow on the front of the cassette is pointing towards the VCR.
Do not apply too much pressure when inserting.

- The VCR turns on automatically.
- The counter is automatically reset to "0:00:00".
- If the cassette's record safety tab has been removed, playback begins automatically.

2 Start playback

Press **PLAY (►)**.

- Tape speed (SP or EP) is automatically detected.
- The S-VHS indicator lights up when you play back a tape recorded in S-VHS mode or in S-VHS ET mode (☞ pg. 27)
- If "VIDEO CALIBRATION" is set to "ON" (default setting: ☞ pg. 40), "VIDEO CALIBRATION" appears on the screen, and this VCR checks the tape condition during automatic tracking.
- If the tape ends during playback or fast-forward search, the cassette indication "⊡" blinks for a few seconds and the VCR starts rewinding the tape automatically.

To stop playback

Press **STOP (■)** on the Remote or **STOP/EJECT (■ / ⏏)** on the front panel.

To rewind the tape

Press **REW (◄◄)** (or turn the **JOG** dial on the front panel to the left).

To fast-forward the tape

Press **FF (►►)** (or turn the **JOG** dial on the front panel to the right).

To eject the tape

Press **STOP/EJECT (■ / ⏏)** on the front panel when the tape is not running.

- You can also eject the cassette with the VCR turned off.

To turn off the VCR

Press **POWER**.

Clean the video heads using a dry cleaning cassette — TCL-2UX — when:

- Rough, poor picture appears while a tape is played back.
- The picture is unclear or no picture appears.
- "USE CLEANING CASSETTE" appears on the screen (only with "SUPERIMPOSE" set to "ON": ☞ pg. 39, 40.)

Basic Playback Features

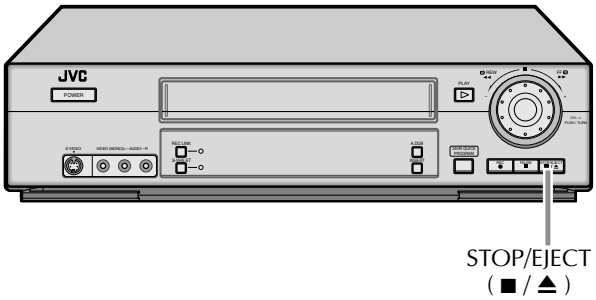

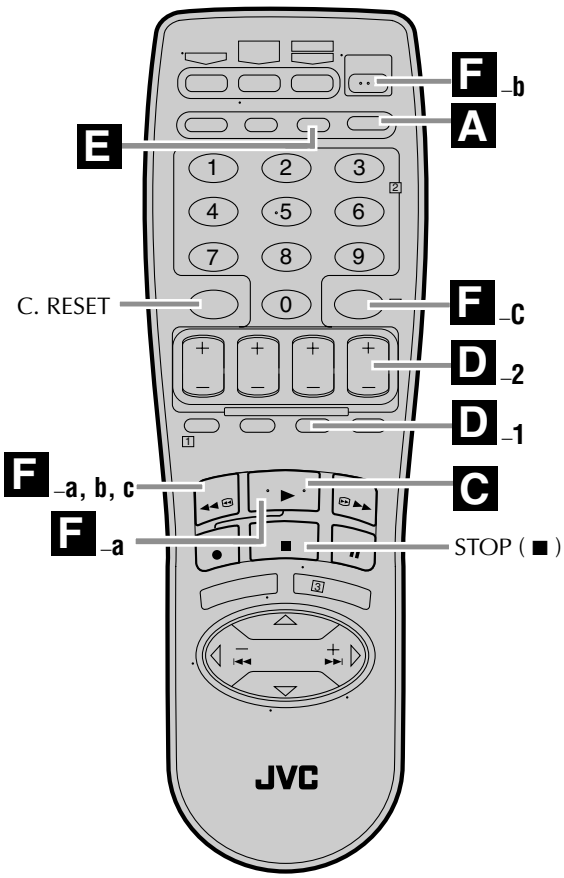

A Changing display information

Press DISPLAY during playback.
Each time you press the button, the front display panel shows the time counter, tape remaining time and the clock time in sequence.

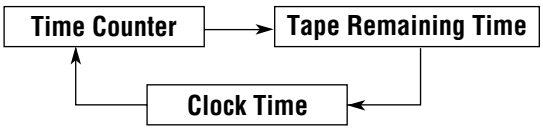

- To display the VCR status including the tape remaining time, the time counter and the clock time on the TV screen, see "Showing on-screen display" (☞ pg. 27).
- The approximate tape remaining time appears and the "◣" indicator lights on the front display panel.
- The tape remaining time is calculated based on the tape speed (SP or EP) being used. The indicated remaining time is only an estimate.

To reset the time counter, press **C. RESET** on the Remote. The counter reading becomes "0:00:00". It is also reset when a tape is inserted.

B Checking tape position

The tape position indicator appears on screen in the following cases:

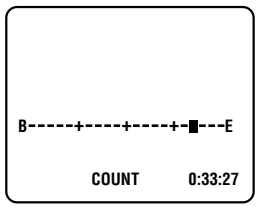

- When you change the VCR operation mode from the stop mode to fast forward or rewind mode.
- When you perform an Index Search (☞ pg. 24) or Instant Review (☞ pg. 24).

The position of " ■ " in relation to "B" (Beginning) or "E" (End) shows you where you are on the tape.

NOTES:
- *"SUPERIMPOSE" must be set to "ON", or the indicator will not appear (☞ pg. 39, 40).*
- *It may take a few seconds for the tape position indicator to be displayed.*

C Playing back tape repeatedly — Repeat Play

You can play back a tape repeatedly (100 times).

While playing back a tape, press and hold PLAY (►) for more than 5 seconds.
The play indicator (▷) on the front display panel starts flashing slowly, and a tape will be played back 100 times.
To stop playback, press **STOP (■)** on the Remote or **STOP/EJECT (■ / ⏏)** on the front panel.

D Adjusting tracking condition
— Tracking Adjustments

Automatic tracking adjustment

This VCR automatically adjusts the tracking condition. Whenever you insert a tape and start playback, automatic tracking starts working and continuously analyzes the signal to enable optimum picture quality during playback.

Manual tracking adjustment

If automatic tracking cannot eliminate noises well during playback, use the manual tracking following the procedures below.

- You can also use the manual tracking during slow motion playback (☞ pg. 29).

1 **Activate manual tracking**

Press **SP/EP** on the Remote during playback.

2 **Eliminate the noises on the TV screen**

Press **CH +** or **–** on the Remote.

- Press it briefly for a fine adjustment, or press and hold for coarse adjustment. Watch the screen and continue adjustment until optimum picture and sound quality are achieved.
- To reactivate automatic tracking, press **SP/EP** on the Remote. The automatic tracking becomes active again.

E Selecting monitor sound
— Audio Monitor

You can select the desired monitor sound.

While playing back a tape on which stereo sound or SAP sound is recorded, press A. MONITOR on the Remote.
Each time you press the button, sound changes as follows:

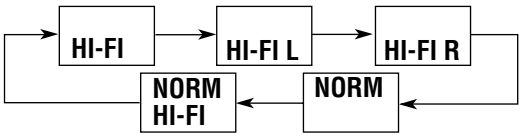

HI-FI:	Normally select this. Hi-Fi sound is played back.
HI-FI L:	Sound on the left Hi-Fi channel is played back.
HI-FI R:	Sound on the right Hi-Fi channel is played back.
NORM:	Sound on the normal track is played back.
NORM HI-FI:	Both sounds on the Hi-Fi track and normal track are mixed and played back.

NOTES:

- *The above indication appears when "SUPERIMPOSE" is set to "ON" (☞ pg. 39, 40), though the monitor sound changes in sequence.*
- *If the tape being played back has no Hi-Fi sound track, the normal sound track will be heard regardless of this setting.*
- *If RF connection (☞ pg. 7) is used for viewing pictures on the TV, sound will be monaural even though you select "HI-FI".*
- *You can also use the menu to select your desired monitor sound. (☞ pg. 42)*

F Automatic operations after rewinding — Next Function Memory

The Next Function Memory "tells" the VCR what to do after rewinding is complete.

- Ensure that the VCR is in stop mode.

a– For Automatic Playback Start
Press **REW (◄◄)**, then press **PLAY (►)** within 2 seconds.

b– For Automatic Power Off
Press **REW (◄◄)**, then press **POWER** within 2 seconds.

c– For Automatic Timer Standby
Press **REW (◄◄)**, then press **TIMER** within 2 seconds.

NOTE:

It is not possible to select the Automatic Timer Standby function if the cassette's record safety tab is removed.

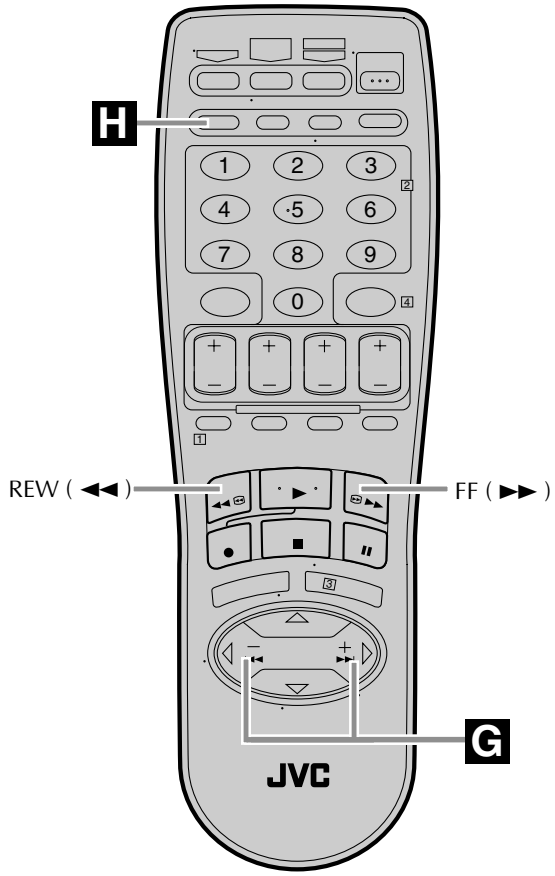

G Locating beginning of recordings — Index Search

Index codes are placed on the tape at the beginning of each recording when recording on this VCR. You can find and automatically play back from the beginning of any recording using the Index Search function.

1 Start search

While the tape is not running, press **SHUTTLE PLUS** ⏮ or ⏭ on the Remote.

2 Access distant code

To access a recording of 2 to 9 index codes away, press **SHUTTLE PLUS** ⏮ or ⏭ repeatedly until the correct number is displayed on screen (only if "SUPERIMPOSE" is set to "ON" ; ☞ pg. 39, 40). Playback begins automatically when the desired recording is located.

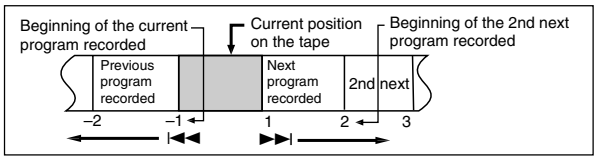

- If you want to find the very beginning of the desired program, press **REW (◄◄)** or **FF (►►)** after playback starts.

NOTE:

An index code is not placed on the tape when recording is resumed from recording pause.

H Locating beginning of timer recordings — Instant Review

At the press of a button, you can turn on the VCR, rewind the tape and begin to view the most recent timer-recorded program.

After ensuring that the VCR is turned off and that the timer mode is disengaged, press REVIEW.

- The VCR turns on, and rewinds to the index code indicating the beginning of the last timer-recorded program, then begins playback automatically.
- You can access a program of 2 to 9 index codes away from the current position on the tape. If, for example, you have 5 programs recorded and you want to watch the third one, press **REVIEW** three times.
- If you want to find the very beginning of the desired program, press **REW (◄◄)** or **FF (►►)** after playback starts.
- If the tape is already rewound when **REVIEW** is pressed, it will play the tape from the beginning. It will not fast-forward to an index code.
- The Instant Review function will also operate if the VCR is turned on.

Other Useful functions for playback

You can also use the following functions for recording.

- **Video Calibration (☞ pg. 40)**
When this function is set to "ON", this VCR checks the condition of the tape in use during playback and recording, and compensates to provide the highest-possible pictures.

- **Picture Control (☞ pg. 40)**
This function helps you to adjust the playback picture quality according to your preference.

- **Video Stabilizer (☞ pg. 41)**
You can automatically correct vertical vibrations in the picture when playing back unstable recordings made on another VCR.

- **Blue Back (☞ pg. 41)**
When this function is set to "ON", the TV screen becomes all blue in the following cases:
– When receiving a channel not in use.
– When stopping playback.

Basic Recording

Turn on the VCR and the TV, and select the VCR channel 3 or 4 (or AV mode) on the TV.

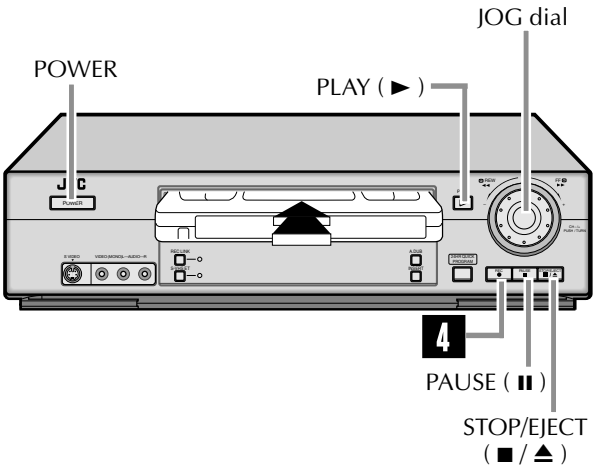

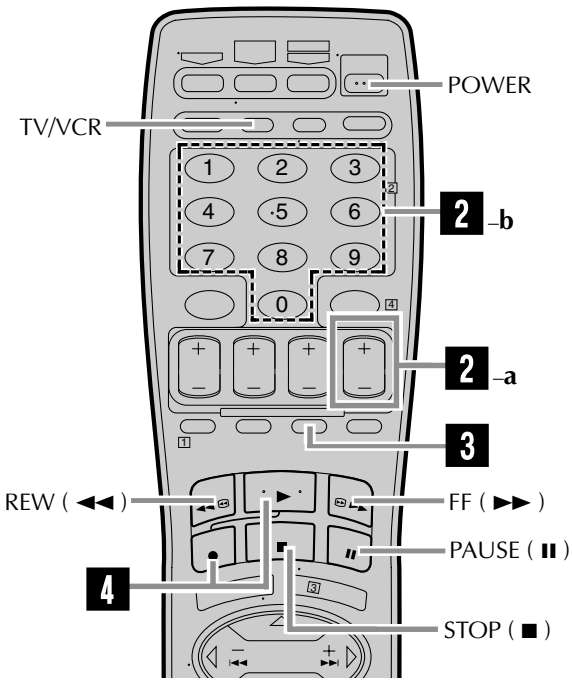

This VCR can check the tape condition during recording (and playback), and realizes the best possible pictures.

1 Load a cassette

Make sure the record safety tab is intact. If not, cover the hole with adhesive tape before inserting the cassette.

2 Select recording channel

On the front panel:
Push the **JOG** dial, then turn it to the left or right.

On the Remote:
a– Press **CH +** or **–**.
or
b– Press the **Number** keys.

- If you connect the TV and the VCR only using the RF connection, press **TV/VCR** on the Remote so that the VCR mode indicator lights on the front display panel, to view the program to be recorded.

3 Set tape speed

Press **SP/EP** to set the recording speed.

4 Start recording

On the front panel:
Press **REC (●)**.

On the Remote:
While holding **REC (●)**, press **PLAY (►)**.

- If "VIDEO CALIBRATION" is set to "ON" (default setting: ☞ pg. 40), this VCR checks the tape condition for about seven seconds, then starts recording. This means that the first seven seconds of the program will not be recorded. If this is inconvenient for you, follow the steps below:
  1. Press **REC (●)** and **PAUSE (❚❚)** to start Video Calibration.
  2. Then press **PLAY (►)** to start recording after Video Calibration is complete.

To pause recording

Press **PAUSE (❚❚)**. To resume recording, press **PLAY (►)**.

To stop recording

Press **STOP (■)** on the Remote or **STOP/EJECT (■ / ⏏)** on the front panel.

To rewind the tape (when it is not running)

Press **REW (◄◄)** (or turn the **JOG** dial on the front panel to the left).

To fast-forward the tape (when it is not running)

Press **FF (►►)** (or turn the **JOG** dial on the front panel to the right).

To eject the tape

Press **STOP/EJECT (■ / ⏏)** on the front panel when the tape is not running.

- You can also eject the cassette with the VCR turned off.

To turn off the VCR

Press **POWER**.

It may be unlawful to record or play back copyrighted material without the consent of the copyright owner.

Basic Recording Features

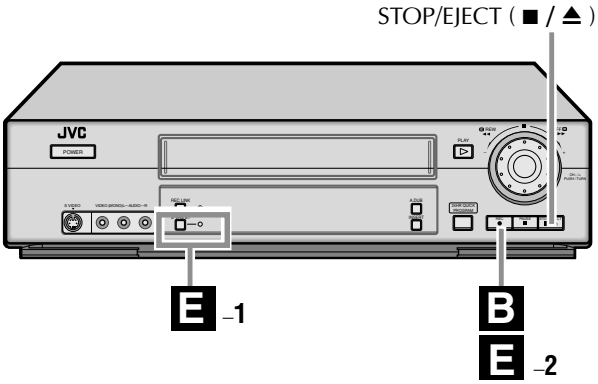

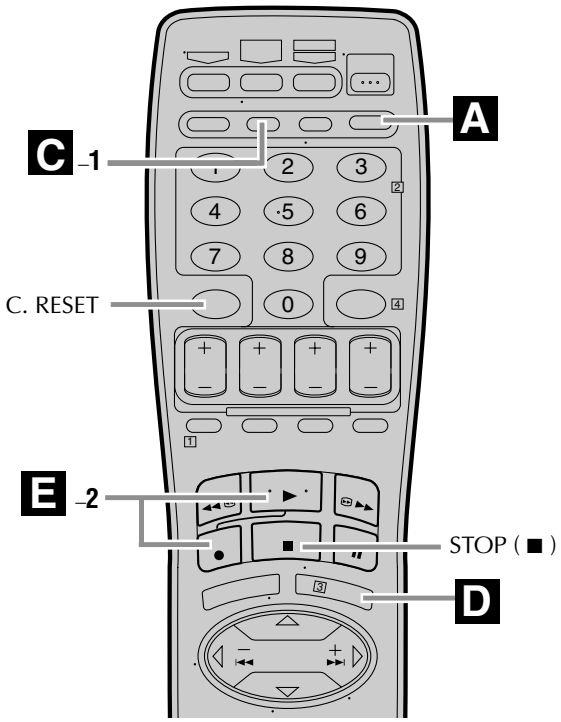

Accidental erasure prevention

To prevent accidental recording on a recorded cassette, remove its record safety tab.
To record on it later, cover the hole with adhesive tape.

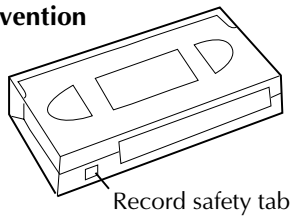

A Changing display information

Press DISPLAY during recording or recording pause.
Each time you press the button, the front display panel shows the time counter, channel number, tape remaining time and the clock time in sequence.

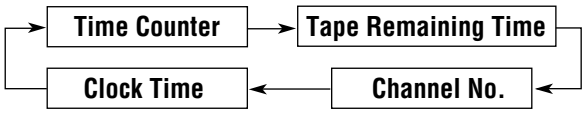

- To display the VCR status including the tape remaining time, the time counter and the clock time on the TV screen, see "Showing on-screen display" (☞ pg. 27).
- The approximate tape remaining time appears and the "◣" indicator lights on the front display panel.
- The tape remaining time is calculated based on the tape speed (SP or EP) being used. The indicated remaining time is only an estimate.

To reset the time counter, press **C. RESET** on the Remote. The counter reading becomes "0:00:00". It is also reset when a tape is inserted.

B Specifying recording length
— Instant Timer Recording (ITR)

You can easily specify the recording length from 30 minutes to 6 hours and the VCR shuts off after recording is finished.

During recording, press REC (●) on the front panel repeatedly until the recording length you want appears on the front display panel.
The ◌ (record) indicator starts flashing.
Each time you press the button, recording length increases in 30-minute intervals (up to 6 hours).

To cancel an ITR, press **STOP (■)** on the Remote or **STOP/EJECT (■ / ⏏)** on the front panel.

C Watching one program while recording another

1 Engage TV mode

During recording...

- **If you connect the TV and the VCR only using the RF connection (☞ pg. 7) to view pictures from the VCR**
  Press **TV/VCR** on the Remote so that VCR mode indicator goes off from the front display panel. (The TV broadcast being recorded disappears.)
- **If you are using the AV connection (☞ pg. 7) to view pictures from the VCR**, change the TV's input mode from AV to TV.

2 Select channel for viewing

Select the channel, you want to watch, on the TV.

D Showing on-screen display

When "SUPERIMPOSE" is set to "ON" (☞ pg. 39, 40), you can see the current VCR status on the TV screen.

- For more detailed information about the on-screen display, see page 63.

1 Display VCR status on TV screen

During recording or recording pause, press **OSD**.
All indications corresponding to the current VCR status are displayed for 5 seconds.
The time counter remains on the screen indicating the elapsed time.

```
CH  125                RECORD
THU 12:00 AM            PAUSE
STEREO                  SP
SAP

B-----+----+----+-■---E
                     INDEX 1
NORM        REMAIN    10:00
HI-FI       COUNT   -1:23:45
```

- The indications are not recorded.

2 Exit on-screen display

Press **OSD** again.

NOTE:

- *If the VCR is in recording pause mode, "RECORD/PAUSE" is always displayed.*
- *The VCR status can be also displayed during playback.*

NOTES:

- *You cannot activate the S-VHS ET function...*
  - *while recording is in progress.*
  - *while timer-recording or Instant Timer Recording (☞ pg. 26) is in progress.*
  - *while Video Calibration (☞ pg. 40) is in progress.*
- *S-VHS ET does not work with S-VHS tapes.*
- *To keep the highest quality recording and playback pictures over a long period of time, S-VHS recording on S-VHS tapes is recommended.*
- *Use of high grade tapes are recommended for S-VHS ET recordings.*
  On some tapes, picture quality will not improves even if the S-VHS ET function is used. Check the recording quality before you start important recordings.
- *You can play back S-VHS ET recordings on most of S-VHS VCRs and of VHS VCR equipped with SQPB (S-VHS QUASI PLAYBACK) function. (Notice some VCRs are not compatible with this function.)*
- *While playing back a tape recorded with this function on some tapes, noise may appear. (If playback picture becomes blurred or interrupted, use a cleaning cassette.)*
- *During special effect playback (☞ pg. 28), noise may appear. If special effect playback is performed frequently on a tape recorded with this function, the tape may be damaged and picture may be deteriorated.*

E Recording on VHS tapes with S-VHS quality — Super VHS ET

This function allows you to record on VHS tapes with S-VHS picture quality. Tapes recorded using this function can be played back on a VCR equipped with the S-VHS ET function.

- You can activate this function only before you start recording on a VHS tape.
- Before recording, make sure "VIDEO CALIBRATION" is set to "ON." (☞ pg. 40)

1 Select S-VHS ET mode

Press **S-VHS ET** on the front panel. The S-VHS ET lamp lights up.

- The S-VHS indicator lights on the front display panel.
- To disengage the S-VHS ET mode, press **S-VHS ET**. The lamp goes off.

2 Start recording

On the front panel:
Press **REC (●)**.

On the Remote:
While holding **REC (●)**, press **PLAY (►)**.

Other useful functions for recording

You can also use the following functions for recording.

- **Video Calibration (☞ pg. 40)**
  When this function is set to "ON", this VCR checks the condition of the tape in use during playback and recording, and compensates to provide the highest-possible pictures.

- **Second Audio Recording (☞ pg. 41)**
  This VCR's built-in MTS decoder enables reception of Multichannel TV Sound broadcast.

  To record a SAP program received, set "2ND AUDIO RECORD" to "ON" using the menu screen.

NOTE:

When the channel is changed on the VCR;

- *The "STEREO" indication appears on the screen for about 5 seconds if the program is a stereo broadcast.*
- *The "SAP" indication appears on the screen for about 5 seconds if the program is a SAP broadcast.*
- *Both indications appear when a stereo program is accompanied by SAP sound.*

- **S-VHS Recording Mode (☞ pg. 42)**
  This VCR allows you to record on an S-VHS tape with VHS picture quality.

Special Effect Playback

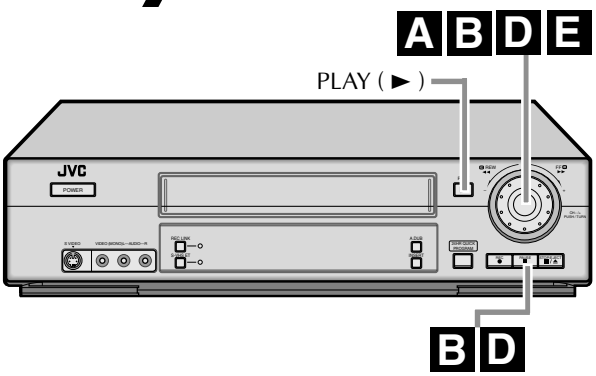

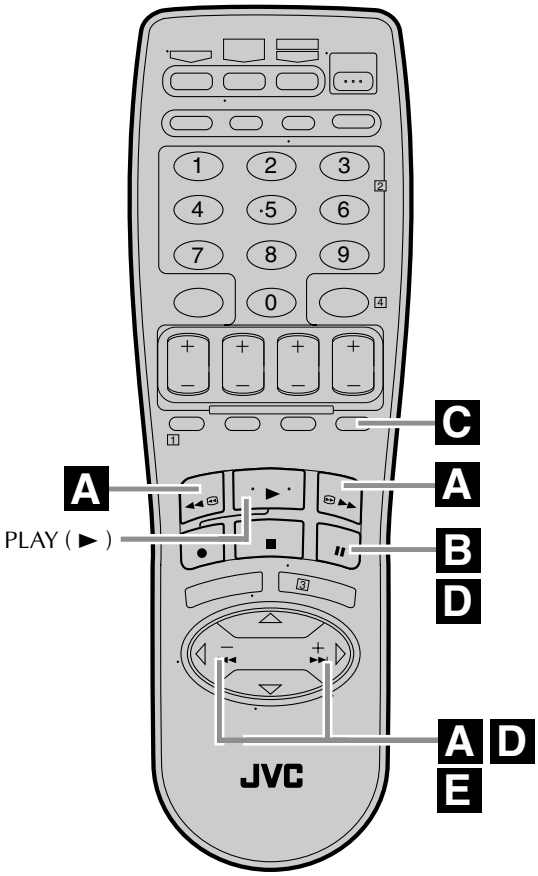

A Locating particular scene rapidly — Picture Search

■ High-Speed Picture Search:

You can rapidly locate a particular scene on the tape.

On the front panel:

Possible during normal playback.

To do forward picture search, turn the **JOG** dial quickly to the right.

To do reverse picture search, turn the **JOG** dial quickly to the left.

- If you release the dial, picture search continues.

On the Remote:

Possible during normal playback or still picture playback.

To do forward picture search, press **FF** (►►).

To do reverse picture search, press **REW** (◄◄).

- If you press and hold the button for more than 2 seconds, simply releasing it cancels the picture search, and normal playback resumes.

To resume normal playback, press **PLAY (►)**.

■ Variable-Speed Picture Search:

Possible during normal playback.

You can change the speed of picture search.

How to use the JOG dial on the front panel:

Turn the **JOG** dial to the right (forward search) or to the left (reverse search).

Each time the **JOG** dial passes a click position, picture search speed changes (see the diagram below).

If you release the dial, picture search continues.

- The speed of picture search is determined by the number of click stops of the **JOG** dial.

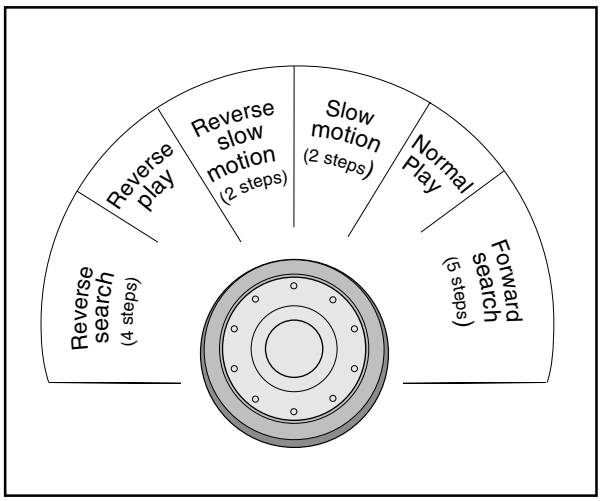

How to use the SHUTTLE PLUS buttons on the Remote:
To do forward picture search, press **SHUTTLE PLUS ►►I** repeatedly.
Each time you press the button, the search speed increases.
- To decrease the speed while forward picture search (toward normal playback, then reverse picture search), press **SHUTTLE PLUS I◄◄** repeatedly.

To do reverse picture search, press **SHUTTLE PLUS I◄◄** repeatedly.
Each time you press the button, the search speed increases while reverse picture search.
- To decrease the speed while reverse picture search (toward normal playback, then forward picture search), press **SHUTTLE PLUS ►►I** repeatedly.

To resume normal playback, press **PLAY (►)**.

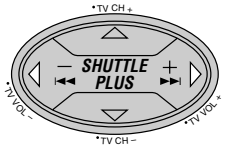

Reverse			Forward		
Reverse search 4 steps	Reverse play	Reverse slow motion 2 steps	Slow motion 2 steps	Normal Play	Forward search 5 steps

B Viewing still picture
— Still Picture Playback

On the front panel:
Push the **JOG** dial during normal playback.

On the front panel or the Remote:
Press **PAUSE (II)** during normal playback.
Playback is freezed and a still picture appears.

To resume normal playback, press **PLAY (►)**.

NOTE:
To obtain a noiseless still picture, it may be necessary to adjust tracking in slow motion playback before starting still picture playback.

C Skipping unwanted portions
— Skip Search

You can skip over (view at high speed) unwanted portions of the tape.

Press SKIP SEARCH once to 4 times during playback.
Each press initiates a 30-second period of high speed playback (up to 2 minutes). When the specified portion of the tape is skipped, normal playback resumes automatically.
To return to normal playback during Skip Search, press **PLAY (►)**.

D Viewing still picture frame by frame — Frame-by-Frame Playback

On the front panel:
During normal playback:
Push the **JOG** dial or press **PAUSE (II)** to pause.
To advance a still picture, turn the **JOG** dial to the right.
To reverse a still picture, turn the **JOG** dial to the left.

On the Remote:
During normal playback:
Press **PAUSE (II)** to pause.
To advance a still picture, press **SHUTTLE PLUS ►►I** (or **PAUSE (II)**) repeatedly.
To reverse a still picture, press **SHUTTLE PLUS I◄◄** repeatedly.

To resume normal playback, press **PLAY (►)**.

E Viewing slow motion picture
— Slow Motion Playback

On the front panel:
During normal playback:
Turn the **JOG** dial to the first or second click-stop to the left (forward slow motion) or to the third or fourth click-stop to the left (reverse slow motion) so that slow motion playback starts. If you release the dial, slow motion playback continues.
- Holding **PAUSE (II)** for more than 2 seconds also starts forward slow motion playback.

On the Remote:
- **During normal playback:**

Press **SHUTTLE PLUS I◄◄** to decrease the playback speed.
Each time you press the button, the speed decreases (toward reverse slow motion playback, then reverse picture search).
- Holding **PAUSE (II)** for more than 2 seconds also starts forward slow motion playback.

To resume normal playback, press **PLAY (►)**.

- **During still picture playback:**

Press and hold **SHUTTLE PLUS ►►I** to start forward (or **SHUTTLE PLUS I◄◄** to start reverse) slow motion playback. When you release the button, slow motion playback stops and a still picture appears.
- Holding **PAUSE (II)** for more than 2 seconds also starts forward slow motion playback.

To resume normal playback, press **PLAY (►)**.

NOTE:
Manual tracking is possible during slow motion playback. During slow motion playback, simply press **CH +** *or* **–** *on the Remote to adjust tracking.*

VCR Plus+® Timer Programing

Turn on the VCR and the TV, and select the VCR channel 3 or 4 (or AV mode) on the TV.

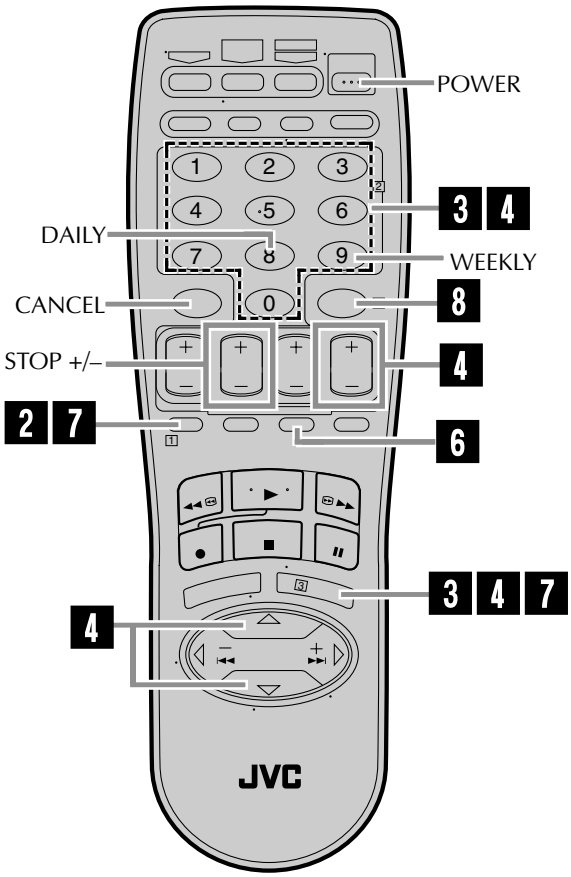

Timer recording allows you to program the VCR to automatically record a broadcast at some future time. Up to 8 timer recording programs can be made using VCR Plus+ timer programing, Express timer programing (☞ pg. 34) or 24HR quick programing method (☞ pg. 36) as far as a year in advance.
The VCR Plus+ timer programing system eliminates the need to input channel, date, start and stop time data when programing timer recording settings. Simply key in the PlusCode number for the TV broadcast you wish to record and the VCR's timer will be automatically programed. (The PlusCode programing numbers are the numbers next to the program in most TV listing.)

1 Load a cassette

Make sure the record safety tab is intact. If not, cover the hole with adhesive tape, then load it into the VCR.

- The VCR turns on, and the counter is reset, automatically.

2 Access PlusCode No. screen

Press **PROG.** on the Remote.

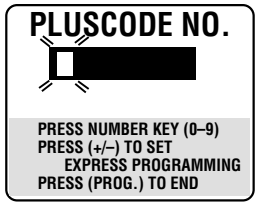

- The clock must be set to access the VCR Plus+ screen.
  If you have not set the clock, the Main Menu screen appears after an error message is displayed. Refer to page 8 for the Plug & Play setting or page 10 for the clock setting procedure.

3 Enter PlusCode number

Press the appropriate **Number** keys to input the PlusCode number printed in the TV listings for the TV broadcast you wish to record, then press **OK**.

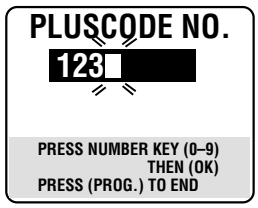

Then;
If the Guide Channel Set screen appears
— go to step 4.
If the VCR Plus+ Program screen appears
— go to step 5.

- To make corrections, press **CANCEL** and input the correct PlusCode number.

4 Input receiving channel number

The guide channel number, which is assigned to the TV or cable station for the PlusCode number that you entered in step 3, will appear automatically on the Guide Channel Set screen.

```
GUIDE CHANNEL SET

GUIDE CH:  12
VCR CH  :---

PRESS NUMBER KEY (0–9)
OR (▲,▼), THEN (OK)
PRESS (PROG.) TO END
```

Press the **Number** keys (or **CH** +/– or **SHUTTLE PLUS** △▽) to input the number of the channel on which the broadcast for the PlusCode number is received on the VCR or cable box, then press **OK**.

- The Guide Channel Set screen appears only when you input the PlusCode number of a station for which the guide channel number has not been set previously.
- If you receive your channels with a cable box and if you have properly set your Controller, "CABLE CH" appears in place of "VCR CH". If not, refer to pages 15 – 17.

5 Check program date

The PlusCode number you entered and the corresponding timer recording program is displayed on the Program screen. Check to make sure it is accurate.

```
PROGRAM 1
(PLUSCODE NO.  12345678)
START          STOP
8:00PM    →    10:00PM
DATE           CH
12/24/00       12  SP
SUN
PRESS (8=DAILY, 9=WEEKLY
STOP+/– = STOP TIME, SP/EP)
PRESS (PROG.) TO END
```

- To change the stop time, press **STOP +/–**.
- To timer-record daily (Monday–Friday) or weekly serials, press **DAILY (M-F)** (number "**8**") or **WEEKLY** (number "**9**"). "DAILY" or "WEEKLY" appears on the Program screen. Pressing the button again makes each corresponding display disappear.
- If you made a mistake, press **CANCEL** to access the VCR Plus+ screen again and input the correct PlusCode number.
- If an incorrect PlusCode number or the one for a broadcast already finished has been inputted, "ERROR" is displayed for about 5 seconds, then the VCR Plus+ screen reappears.

6 Set tape speed

Press **SP/EP**.

7 Return to normal screen

Press **PROG.** or **OK**.
"PROGRAM COMPLETED" appears on the screen for about 5 seconds, then normal screen appears.

- If "PROGRAM NOT COMPLETED PROGRAM OVERLAP" appears, you have another program overlapping the program you have just made. The Program Check screen appears and conflicting programs will start blinking.
  You can now correct the conflicting programs. See "When programs overlap each other" on page 38.

8 Engage timer recording standby mode

Press **TIMER**.
The VCR turns off automatically and "⊖" is displayed on the front display panel.

To use the VCR while it is in timer recording standby mode

Press **TIMER** to cancel the timer recording standby mode, then press **POWER** to turn on the VCR.
DO NOT forget to put the VCR into timer recording standby mode again by pressing **TIMER** after you use the VCR; otherwise, you cannot record the broadcasts you want.

- When "AUTO TIMER" (☞ pg. 40) is set to "ON", the timer recording standby mode is automatically engaged when the VCR is turned off. It is temporarily canceled when the VCR is turned on. You do not have to press **TIMER** to engage or disengage the timer recording standby mode.

IMPORTANT
If you have moved to a different area or if a broadcasting station's channel number has been changed, the wrong VCR CH or CABLE CH number will be displayed on the Program screen in step 5. When this happens, set the correct guide channel number for that station. (☞ pg. 32, "Changing VCR Plus+ Setting")

NOTES:

- *Even if a power failure occurs, the VCR keeps your timer programs. However, the clock time, channel settings, and other menu settings are lost.*
  As a result, when the power is supplied again to this VCR after the power failure, the following will take place.
  1. *This VCR starts the Plug & Play setting automatically to restore the clock time and channel setting.*
  2. *If the clock time and channel setting are restored correctly, each timer program you have made will start at its start time unless its end time has elapsed.*
- *To timer-record cable channels received through a cable box, be sure to keep the cable box turned on.*

Changing VCR Plus+® Setting

Turn on the VCR and the TV, and select the VCR channel 3 or 4 (or AV mode) on the TV.

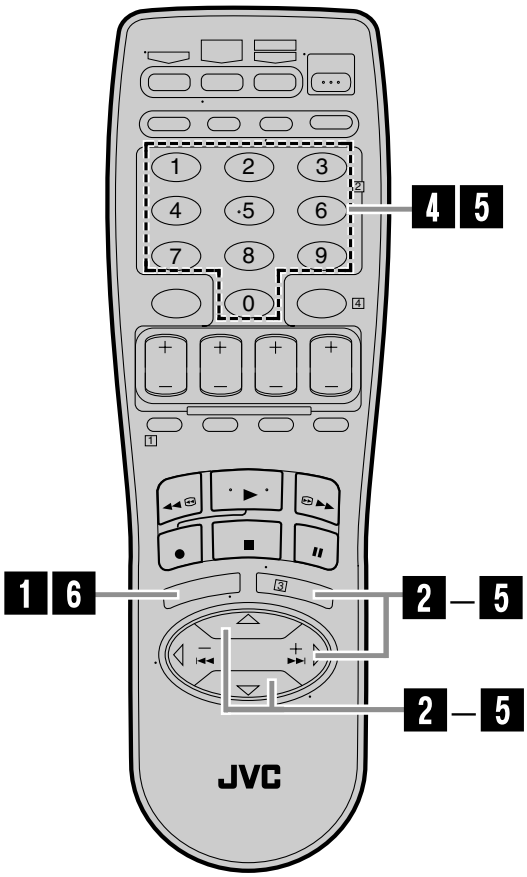

IMPORTANT
If you have moved to a different area or if a broadcasting station's channel number has been changed, the wrong VCR CH or CABLE CH number will be displayed on the Program screen (☞ step 5 on page 31). When this happens, perform the following steps to set the correct guide channel number for that station.

To ensure that VCR Plus+ timer recording operates correctly, it is necessary to set the VCR Plus+ "Guide Channel Set" for each station. Read the following information carefully.

VCR Plus+ guide channel matching
The VCR Plus+ programing system assigns a VCR Plus+ guide channel to the TV channels and the cable channels. These guide channel numbers are also called the VCR Plus+ channel codes. Most TV listings have a section, usually a chart, indicating the guide channel numbers assigned to each station. For accurate VCR Plus+ programing, the VCR Plus+ guide channel number for each station should match the channel number on which it is received in your area.

NOTES:

- *In many instances, the VCR Plus+ guide channel numbers for cable and broadcast TV stations DO NOT match the channel number on which it is received by your VCR or cable box. Check your TV listing, or contact your cable supplier for details.*
- *Many TV stations can be viewed on cable. Check your TV listing, or contact your cable supplier for details.*

1 Access Main Menu screen

Press **MENU**.

2 Access Initial Set screen

Press **SHUTTLE PLUS** △▽ to move the highlight bar (arrow) to "INITIAL SET", then press **OK** or **SHUTTLE PLUS** ▷.

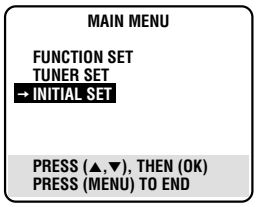

3 Access Guide Channel Set screen

Press **SHUTTLE PLUS** △▽ to move the highlight bar (arrow) to "GUIDE CHANNEL SET", then press **OK** or **SHUTTLE PLUS** ▷.

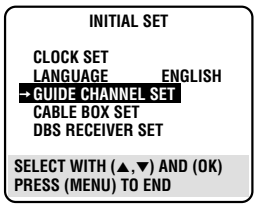

4 Input guide channel number

Press the **Number** keys or **SHUTTLE PLUS** △▽ to input the VCR Plus+ guide channel number as shown in the TV listing, then press **OK** or **SHUTTLE PLUS** ▷.

(Ex.) When inputting the guide channel number 6 for WNJU(Ind.)

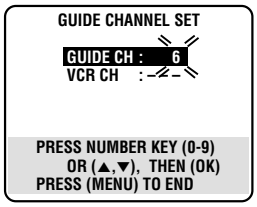

- If you receive your channels with a cable box and if you have properly set your Controller, "CABLE CH" appears in place of "VCR CH". If not, refer to pages 15 – 17 and re-perform the procedure.

5 Input receiving channel number

Press the **Number** keys or **SHUTTLE PLUS** △▽ to input the number of the channel on which the guide channel's broadcasts are received, then press **OK** or **SHUTTLE PLUS** ▷.

(Ex.) If WNJU(Ind.) is received on channel 47

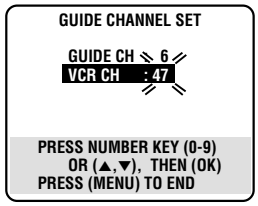

- Repeat steps **4** and **5** for each instance.

6 Return to normal screen

Press **MENU**.

Express Timer Programing

Turn on the VCR and the TV, and select the VCR channel 3 or 4 (or AV mode) on the TV.

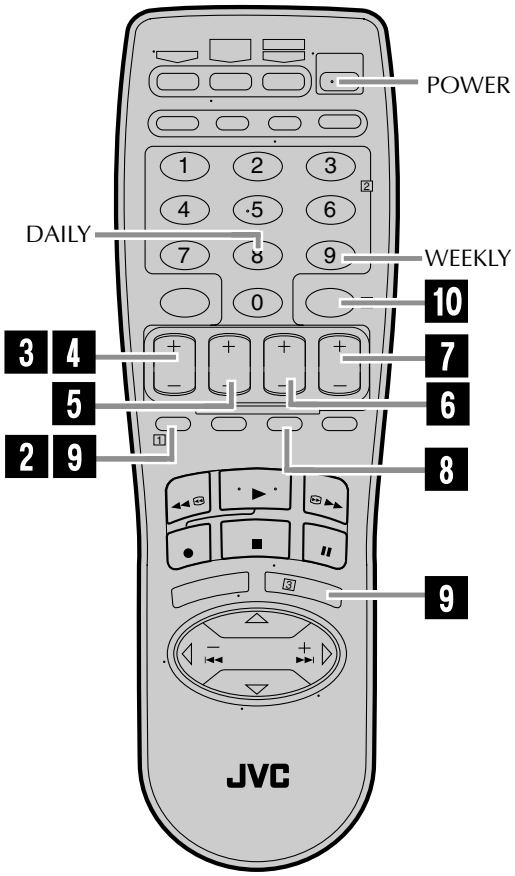

You can directly program the VCR's timer to record up to 8 broadcasts, as far as a year in advance. Remember, the clock must be set before you can program the timer (☞ pg. 8 or 10).

1 Load a cassette

Make sure the record safety tab is intact. If not, cover the hole with adhesive tape, then load it into the VCR.

- The VCR turns on, and the counter is reset, automatically.

2 Access VCR PLUS+ screen

Press **PROG.**.

3 Access Program screen

Press **START +/–** once. (If no program is stored, "PROGRAM 1" appears.)

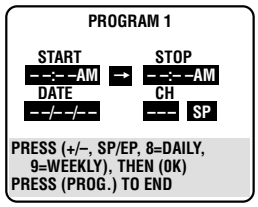

4 Set program start time

Press **START +/–** repeatedly to enter the time you want recording to start.

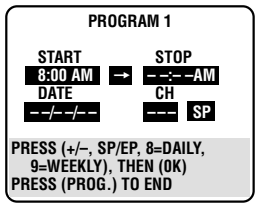

- Press and hold **START +/–** to increase the time in 30-minute intervals.

5 Set program stop time

Press **STOP +/–** repeatedly to enter the time you want recording to stop.

- Press and hold **STOP +/–** to increase the time in 30-minute intervals.

6 Set program date

Press **DATE +/–**. (The current date is displayed on the screen. The date you enter appears in its place.)

7 Set channel number

Press **CH +/–**.

- If you are using a DBS receiver, see "ATTENTION FOR DBS RECEIVER USERS" on next page.
- Holding down **CH +/–** rapidly changes the channel numbers.

8 Set tape speed

Press **SP/EP** to set the tape speed.

9 Return to normal screen

Press **PROG.** or **OK**.
"PROGRAM COMPLETED" appears on the screen for about 5 seconds, then normal screen appears.

- If "PROGRAM NOT COMPLETED PROGRAM OVERLAP" appears, you have another program overlapping the program you have just made. The Program Check screen appears and conflicting programs will start blinking.
  You can now correct the conflicting programs. See "When programs overlap each other" on page 38.

10 Engage timer recording standby mode

Press **TIMER**.
The VCR turns off automatically and "◷" is displayed on the front display panel.

To timer-record daily (Monday–Friday) or weekly serials

Press **DAILY (M-F)** (number "**8**") or **WEEKLY** (number "**9**") anytime during steps **3** through **9**.
"DAILY" or "WEEKLY" appears on the Program screen.

- Pressing the button again makes the corresponding indication disappear.

To use the VCR while it is in timer recording standby mode

Press **TIMER** to cancel the timer recording standby mode, then press **POWER** to turn on the VCR.
DO NOT forget to put the VCR into timer recording standby mode again by pressing **TIMER** after you use the VCR; otherwise, you cannot record the broadcast you want.

- When "AUTO TIMER" (☞ pg. 40) is set to "ON", the timer recording standby mode is automatically engaged when the VCR is turned off. It is temporarily canceled when the VCR is turned on. You do not have to press **TIMER** to engage or disengage the timer recording standby mode.

NOTES:

- *Even if a power failure occurs, the VCR keeps your timer programs. However, the clock time, channel settings, and other menu settings are lost.*
  As a result, when the power is supplied again to this VCR after the power failure, the following will take place.
  1. This VCR starts the Plug & Play setting automatically to restore the clock time and channel setting.
  2. If the clock time and channel setting are restored correctly, each timer program you have made will start at its start time unless its end time has elapsed.
- *Programs that start after midnight must have the next day's date.*
- *After timer recording is completed, the VCR turns off automatically.*
- *You can program the timer recording while a regular recording is in progress; the menu screens will not be recorded.*
- *If the tape reaches its end during timer recording, the cassette is automatically ejected.*
- *To timer-record cable or satellite channels, be sure to keep the cable box or DBS receiver turned on.*

ATTENTION FOR DBS RECEIVER USERS

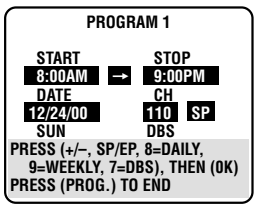

If you are using a DBS receiver (unless "DBS RECEIVER SET" is set to "OFF" ☞ pg. 19), the band indication (TV, CATV or DBS) appears under the channel number indication.

TV :To timer-record a regular TV broadcast received on the VCR.
CATV :To timer-record a cable TV broadcast received on the VCR, or through a cable box (unless "CABLE BOX SET" is set to "OFF" ☞ pg. 16).
DBS :To timer-record a satellite broadcast received through a DBS receiver.

NOTE:

If "BAND" is set to "TV" on the Tuner Set screen (☞ pg. 13) and "CABLE BOX SET" is set to "OFF" on the Cable Box Set screen (☞ pg. 16), "CATV" will not be displayed on the Program screen; If "BAND" is set to "CATV" or "CABLE BOX SET" is set to "ON", "TV" will not be displayed.

If the channel number entered requires that the band be set, "7=DBS" is displayed on the screen.
If this happens, press the **Number** key "**7 (DBS)**" to select "DBS".

24HR Quick Programing

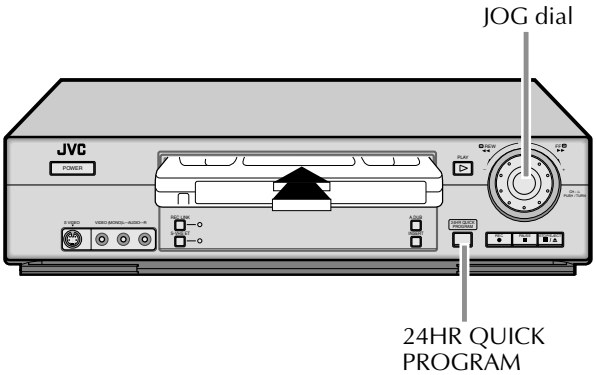

You can program a timer recording that starts within 24 hours. Up to 8 timer recording programs can be made as far as a year in advance. Remember, the clock must be set before you can program the timer (☞ pg. 8 or 10).

1 Load a cassette

Make sure the record safety tab is intact. If not, cover the hole with adhesive tape, then load it into the VCR.

- The VCR turns on, and the counter is reset, automatically.

2 Access 24HR quick program display.

Push **24HR QUICK PROGRAM**. "⊢" and start time start blinking on the display panel.

Program start time indicator

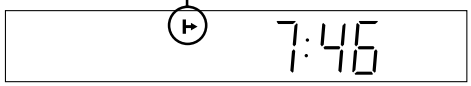

3 Set program start time

Turn the **JOG** dial to the left or right. Then, push the **JOG** dial. "→|" and start time start blinking on the display panel.

Program start time indicator

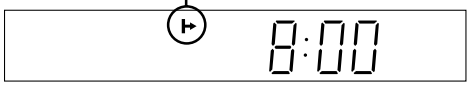

- One click stop of the **JOG** dial changes the time in 5-minute intervals.

4 Set program stop time

Turn the **JOG** dial to the left or right. Then, push the **JOG** dial and channel number will start blinking.

Program stop time indicator

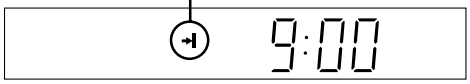

- One click stop of the **JOG** dial changes the time in 5-minute intervals.

5 Set channel number

Turn the **JOG** dial to the left or right.

- You can cancel the setting at any time by pressing and holding the **JOG** dial for more than 3 seconds. Repeat from the step 3.

6 Engage timer recording standby mode

Press **24HR QUICK PROGRAM**.
The VCR turns off automatically and "⏲" is displayed on the front display panel.

NOTES:

- *If "Err" appears on the display panel, repeat the steps again.*
- *When a menu screen is shown, you cannot use 24HR quick programing function. Press **MENU** to return to normal screen, and try again.*
- *You can use 24HR quick programing function also when the VCR is turned off.*
- *For 24HR quick programing function, the program overlap warning display does not appear even if some programs overlap each other.*
- *Even if a power failure occurs, the VCR keeps your timer programs. However, the clock time, channel settings, and other menu settings are lost.*
  As a result, when the power is supplied again to this VCR after the power failure, the following will take place.
  1. *This VCR starts the Plug & Play setting automatically to restore the clock time and channel setting.*
  2. *If the clock time and channel setting are restored correctly, each timer program you have made will start at its start time unless its end time has elapsed.*

Timer warning display

A warning appears on the TV screen to tell you that the timer-recording is to start in 5 minutes if you are not in the timer recording standby mode at that time. Press **TIMER** to put the VCR into timer recording standby mode. To clear the display, press **CANCEL** on the Remote.

–WARNING–
TIMER RECORDING
TO START SOON
(CANCEL)

Turn on the VCR and the TV, and select the VCR channel 3 or 4 (or AV mode) on the TV.

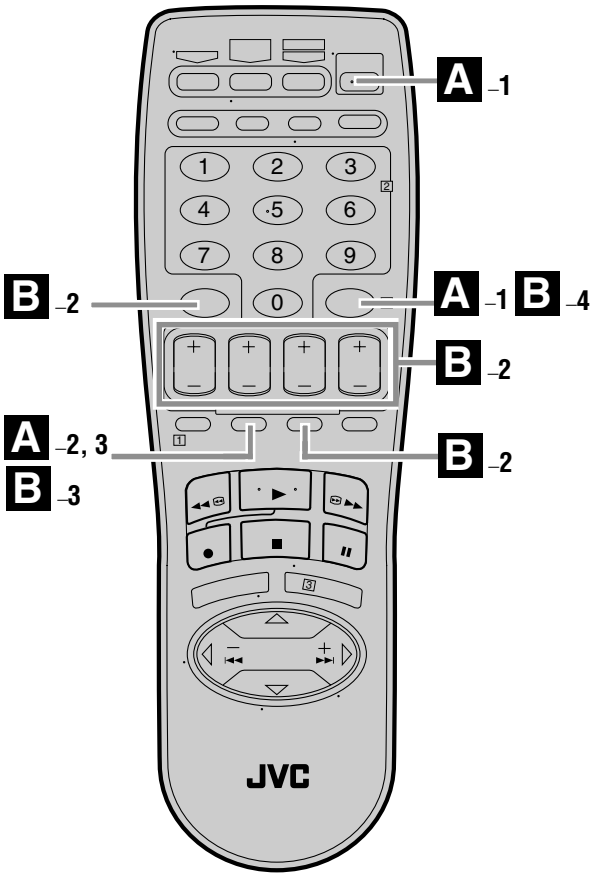

A Checking program settings

1 Disengage timer

Press **TIMER**, then press **POWER**.

- When "AUTO TIMER" (☞ pg. 40) is set to "ON", you do not have to press **TIMER**.

2 Access Program Check screen

Press **PROG. CHECK**.

PR	START	STOP	CH	DATE
1	8:00P	10:00	12	12/24
2	10:00A	10:45	40	12/25
3	11:30P	1:00	125	12/25
4				
5				
6				
7				
8				

PRESS (CHECK) TO NEXT

3 Access Program screen

Press **PROG. CHECK** again to check more detailed information. Each time you press **PROG. CHECK**, the next program's Program screen appears. When all Program screens are shown, normal screen resumes.

B Canceling or changing program settings

1 Access Program screen

Repeat steps **1** to **3** above.

2 Cancel or change program setting

To cancel a program, press **CANCEL** when the Program screen you do not want is shown.

To change a program, press the appropriate button: **START+/–**, **STOP+/–**, **DATE+/–**, **CH+/–**, and/or **SP/EP** when the Program screen on which you want to make changes is shown.

3 Return to normal screen

Press **PROG. CHECK** as many times as necessary until no Program screen is shown.

4 Reengage timer recording standby mode

Press **TIMER**.

- When "AUTO TIMER" (☞ pg. 40) is set to "ON", the timer recording standby mode automatically resumes when you turn off the VCR.

Other Useful functions for timer recording

You can also use the following functions for timer recording.

- **Auto Timer (☞ pg. 40)**

When "AUTO TIMER" is set to "ON", the timer recording standby mode is automatically engaged when the VCR is turned off. It is temporarily canceled when the VCR is turned on. You do not have to press **TIMER** to engage or disengage the timer recording standby mode.

- **Auto SP → EP Timer (☞ pg. 41)**

If there is not enough tape to record the entire broadcast for recording in SP mode, the VCR automatically switches to EP mode to allow complete recording. This feature is especially handy when recording a broadcast of more than 2 hours in length.

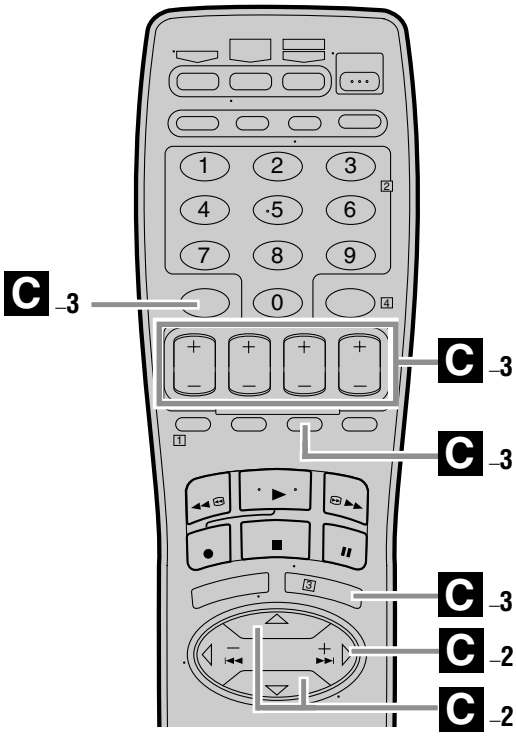

C When programs overlap each other

If "PROGRAM NOT COMPLETED PROGRAM OVERLAP" appears, you have another program overlapping the program you have just made.
The Program Check screen appears and conflicting programs will start blinking.

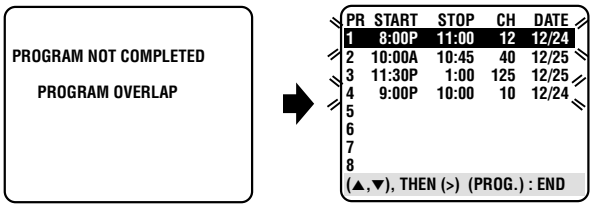

EX. Program 1 (you have just made) and Program 4 overlap each other

1 Confirm overlapping programs

Overlapping programs blink on the screen.

2 Select program to modify

Press **SHUTTLE PLUS** △▽, then press **SHUTTLE PLUS** ▷.

- You can only select one of the overlapping programs.

NOTE:

If you do not mind this overlap, press **PROG.** *to finish the timer program setting. See "ATTENTION" to the right. Without doing anything for about 1 minute, the VCR will finish the timer programing.*

3 Cancel or change program setting

To cancel a program, press **CANCEL** when the Program screen you do not want is shown. "PROGRAM COMPLETED" appears on the screen for about 5 seconds, then normal screen appears.

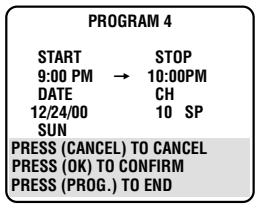

To change a program, press the appropriate button: **START+/–**, **STOP+/–**, **DATE+/–**, **CH+/–**, and/or **SP/EP** when the Program screen on which you want to make changes is shown, then press **OK**.
"PROGRAM COMPLETED" appears on the screen for about 5 seconds, then normal screen appears.

NOTE:

If the overlap is not yet solved or another overlap occurs with the timer program setting made last after making correction on a program, the conflicting programs will be shown on the Program Check screen again. Repeat the above steps again until the overlap is solved.

ATTENTION

If there is a conflict in the timer schedule and one program overlaps with another, only the parts shown below in gray will be recorded.

Pattern 1: *The program with the lower program number will be recorded.*

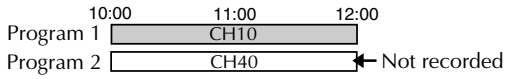

Pattern 2: *The program starting earlier will be recorded.*

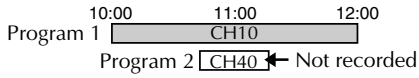

Pattern 3: *The program starting earlier will be recorded, followed by the remaining portion of the other program.*

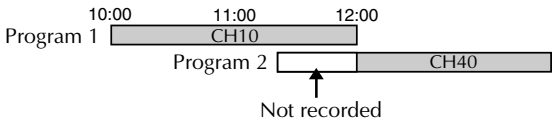

Useful Function Settings

Turn on the VCR and the TV, and select the VCR channel 3 or 4 (or AV mode) on the TV.

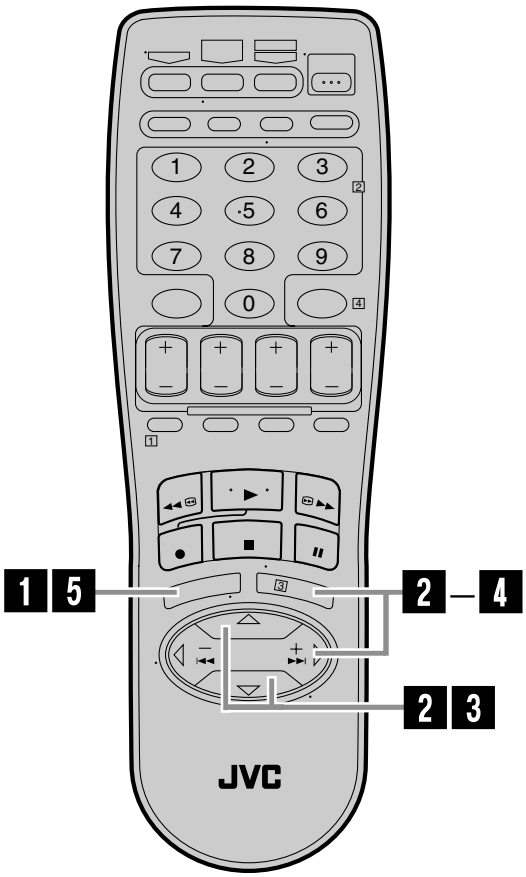

You can use the other useful function settings on the Function Set screen by following the procedure described below.

- For the functions you can set on the Function Set screen, see pages 40 to 43.

1 Access Main Menu screen

Press **MENU**.

2 Access Function Set screen

Press **SHUTTLE PLUS** △▽ to move the highlight bar (arrow) to "FUNCTION SET", then press **OK** or **SHUTTLE PLUS** ▷.

MAIN MENU
→ FUNCTION SET
TUNER SET
INITIAL SET
PRESS (▲,▼), THEN (OK)
PRESS (MENU) TO END

3 Select Function.

Press **SHUTTLE PLUS** △▽ to move the highlight bar (arrow) to the function you want to set.

For HR-S5900U/5910U

FUNCTION	
→ VIDEO CALIBRATION	ON
PICTURE CONTROL	AUTO
AUTO TIMER	OFF
SUPERIMPOSE	ON
AUTO SP→EP TIMER	OFF
VIDEO STABILIZER	OFF
NEXT PAGE	

SELECT WITH (▲,▼) AND (OK)
PRESS (MENU) TO END

PREVIOUS PAGE	
→ BLUE BACK	ON
2ND AUDIO RECORD	OFF
AUDIO MONITOR	HI-FI
S-VHS MODE	ON
AV COMPU-LINK	ON
FRONT AUX INPUT	VIDEO
REAR AUX INPUT	VIDEO

SELECT WITH (▲,▼) AND (OK)
PRESS (MENU) TO END

For HR-S3900U/3910U

FUNCTION	
→ VIDEO CALIBRATION	ON
PICTURE CONTROL	AUTO
AUTO TIMER	OFF
SUPERIMPOSE	ON
AUTO SP→EP TIMER	OFF
VIDEO STABILIZER	OFF
NEXT PAGE	

SELECT WITH (▲,▼) AND (OK)
PRESS (MENU) TO END

PREVIOUS PAGE	
→ BLUE BACK	ON
2ND AUDIO RECORD	OFF
AUDIO MONITOR	HI-FI
S-VHS MODE	ON
AV COMPU-LINK	ON
REAR AUX INPUT	VIDEO

SELECT WITH (▲,▼) AND (OK)
PRESS (MENU) TO END

4 Change setting

Press **OK** or **SHUTTLE PLUS** ▷.

5 Return to normal screen

Press **MENU**.

* The default setting is **bold** in the table below.

■ VIDEO CALIBRATION **ON** OFF	When this function is set to "ON", this VCR checks the condition of the tape in use during playback and recording, and compensates to provide the highest-possible pictures. This takes place whenever you play back a tape or start recording after inserting a tape. *NOTES:* ● *During playback, this function is always working even though "VIDEO CALIBRATION" appears just at the beginning of automatic tracking.* ● *During recording, this function works only for the first EP recording and the first SP recording on an inserted tape.* *For timer recording, this function checks the tape condition both for the SP recording and the EP recording before the first timer recording starts.* ● *When you play back rental tapes or tapes recorded on other VCRs, set this function either "ON" or "OFF" whichever gives you the best picture.*
■ PICTURE CONTROL **AUTO** (NORM): Normally select this. Picture quality is adjusted automatically. When "VIDEO CALIBRATION" is "OFF", "NORM" will appear instead of "AUTO". EDIT: Minimizes picture degradation during editing (recording and playback). SOFT: Reduces image coarseness when viewing overplayed tapes containing much noise. SHARP: Clearer, sharper-edged picture when viewing images with much flat, same-colored surfaces such as cartoons.	This function helps you to adjust the playback picture quality according to your preference. *NOTES:* ● *When you select "EDIT", "SOFT" or "SHARP", the selected mode will not change until you select again.* ● *Select "EDIT" when you are editing tapes (☞ pg. 47, 48, and 51). After you finish editing the tapes, select "AUTO" ("NORM" when "VIDEO CALIBRATION" is "OFF".)*
■ AUTO TIMER ON **OFF**	● **When this function is set to "ON":** The timer recording standby mode is automatically engaged when the VCR is turned off. It is temporarily canceled when the VCR is turned on. You do not have to press **TIMER** to engage or disengage the timer recording standby mode. ● **When this function is set to "OFF":** You have to press **TIMER** to engage or disengage the timer recording standby mode.
■ SUPERIMPOSE **ON** OFF	When this function is set to "ON", various VCR status information (on-screen display) appears on the screen. *NOTES:* ● *When you use this VCR as the playback VCR for editing a tape, be sure to set this function to "OFF"; otherwise, the VCR status information (on-screen display) will be recorded on the edited tape.* ● *If you select a channel on which no signal is received, the channel number is displayed regardless of this function setting.*

* The default setting is **bold** in the table below.

■ **AUTO SP → EP TIMER** ON **OFF**	When this function is set to "ON", the VCR automatically switches to EP mode to allow complete recording if there is not enough tape to record the entire program while timer-recording in SP mode. **For Example . . .** Recording a program of 140 minutes in length onto a 120-minute tape Approximately 110 minutes — SP mode Approximately 30 minutes — EP mode Make sure you set this function to "ON" before the timer-recording starts. *NOTES:* ● *If you have programed the VCR to timer-record 2 or more programs, the second program and those thereafter may not fit on the tape with this function set to "ON". In this case, do not use this function, but change the tape speed manually during timer programing.* ● *In order to ensure that the recording fits on the tape, this function may leave a slight non-recorded portion at the end of the tape.* ● *There may be some noise and sound disturbance where the tape speed switches from SP to EP mode on the tape.* ● *This function is not available during ITR (Instant Timer Recording), and will not work properly on the following tapes: T(ST)-30, T(ST)-60, T(ST)-90, and T(ST)-120.*
■ **VIDEO STABILIZER** ON **OFF**	When this function is set to "ON", you can automatically correct vertical vibrations in the picture when playing back unstable recordings made on another VCR. *NOTES:* ● *When you finish viewing a tape, be sure to set this function to "OFF".* ● *Regardless of the setting, this function has no effect during recording and during special effects playback.* ● *The on-screen display may jitter vertically when this function is set to "ON".* ● *To watch recordings with close-caption, set this function to "OFF".*
■ **BLUE BACK** **ON** OFF	When this function is set to "ON", the TV screen becomes all blue in the following cases: ● When receiving a channel not in use. ● When stopping playback. *NOTE:* *When you want to receive an unstable channel with poor signals, set this function to "OFF".*
■ **2ND AUDIO RECORD** ON **OFF**	**When this function is set to "ON";** ● If a SAP program is received, the SAP audio is recorded on both the normal and Hi-Fi tracks. The main audio is not recorded. ● If a non-SAP program is received, the main audio is recorded on both the Hi-Fi and normal tracks. **When this function is set to "OFF",** the SAP audio cannot be recorded.

* The default setting is **bold** in the table below.

■ AUDIO MONITOR **HI-FI**: Normally select this. Hi-Fi sound is played back. HI-FI L: Sound on the left Hi-Fi channel is played back. HI-FI R: Sound on the right Hi-Fi channel is played back. NORM: Sound on the normal track is played back. MIX: Both sounds on the Hi-Fi track and normal track are mixed and played back.	This VCR can record two sound tracks simultaneously (normal and Hi-Fi) on a Hi-Fi stereo tape. You can select the sound track(s) to listen to while playing back a Hi-Fi stereo tape. In addition, when playing back a prerecorded tape containing two separate audio programs on the Hi-Fi tracks, you can choose either one by selecting either "HI-FI L" or "HI-FI R". *NOTES:* • *While playing back a monaural tape, sounds on the normal track will be heard regardless of this setting.* • *If RF connection (☞ pg. 7) is used for viewing pictures on the TV, sound will be monaural even though you select "HI-FI".* • *You can also use the* **A. MONITOR** *button on the Remote to select the desired monitor sound. (☞ pg. 23)*
■ S-VHS MODE **ON** OFF	You can determine which recording mode — either S-VHS mode or VHS mode — is used for recording on S-VHS tapes. **When this function is set to "ON",** you can record on S-VHS tapes with S-VHS picture quality. **When this function is set to "OFF",** you can record on S-VHS tapes with VHS picture quality. *NOTES:* • *S-VHS mode allows you to make high quality video recordings with horizontal resolution of 400 lines, comparing with the 230 lines of resolution of conventional VHS recordings. To achieve the highest quality picture we recommended to record in S-VHS mode. (But remember that a conventional VHS VCR without SQPB cannot play back S-VHS tapes recorded in S-VHS mode.)* • *S-VHS MODE setting does not affect recording on VHS tapes. Recording on VHS tapes is always performed in VHS mode except when using S-VHS ET mode (☞ pg. 27).*
■ AV COMPU-LINK **ON** OFF	The REMOTE PAUSE/AV COMPULINK terminal on the rear panel can be used as either the REMOTE PAUSE terminal or the AV COMPULINK terminal. **When this function is set to "ON",** you can use the this terminal as the AV COMPULINK terminal. By connecting other JVC's AV COMPULINK components (see the diagram on page 43), including amplifiers (or receivers) and televisions, one touch control of the audio and video components linked via their AV COMPULINK connectors becomes possible. **For example:** simply load a cassette in the VCR and press **PLAY (►)** and the AV COMPULINK components automatically turn on, the TV's AV mode is selected and the VCR starts playback. (You do not have to press **PLAY (►)** if the cassette's record safety tab is removed.) **When this function is set to "OFF",** you can use this terminal as the REMOTE PAUSE terminal. (☞ pg. 47) *NOTE:* *Connection varies depending on the type of JVC TV you have. Refer to the TV's instruction manual when making this connection.* **CONTINUED ON NEXT PAGE ➡**

* The default setting is **bold** in the table below.

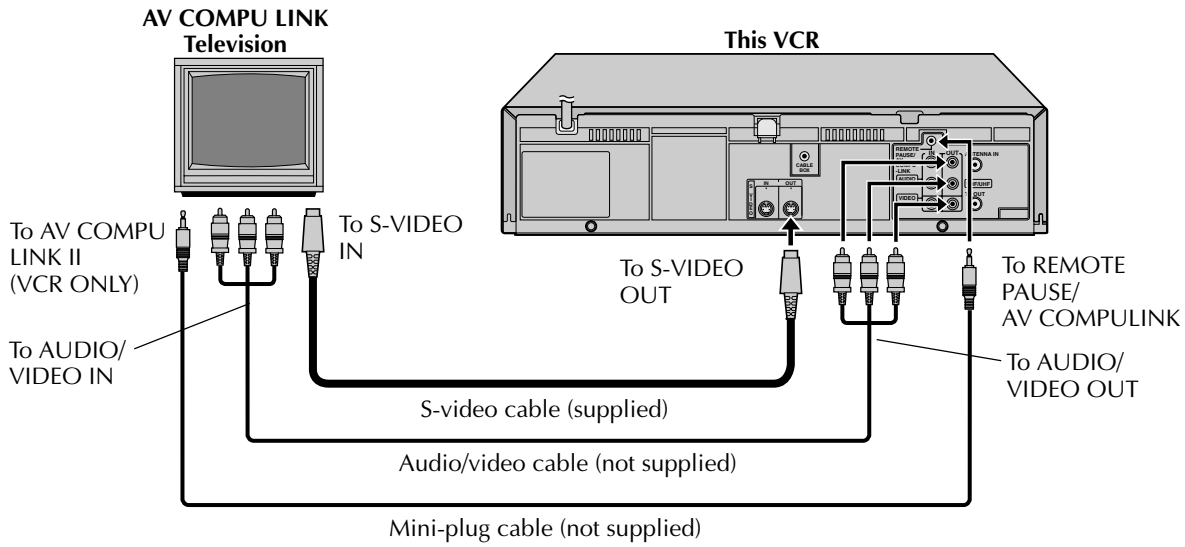

■ **FRONT AUX INPUT** **VIDEO** S-VIDEO	**This function is ONLY FOR HR-S5900U/5910U.** You have to select which terminal — either VIDEO (composite) or S VIDEO (Y/C separate signals) to use as the video input terminal on the front panel. Make sure to select the correct terminal; otherwise, you may fail in recording (editing) on this VCR.
■ **REAR AUX INPUT** **VIDEO** S-VIDEO	You have to select which terminal — either VIDEO (composite) or S VIDEO (Y/C separate signals) to use as the video input terminal on the rear panel. Make sure you select the correct terminal; otherwise, you may fail in recording (editing) on this VCR.

Satellite Auto Recording

This function allows you to automatically record a satellite program which is timer-programed on your DBS receiver.

Preparation: Connect a DBS receiver to the AUDIO/VIDEO IN or S VIDEO IN (L-1) connectors* on the rear; otherwise, you cannot use this function.
• You can also connect the cable box if it has a timer.
* *To use these connectors, you have to select which one to use (☞ pg. 43).*

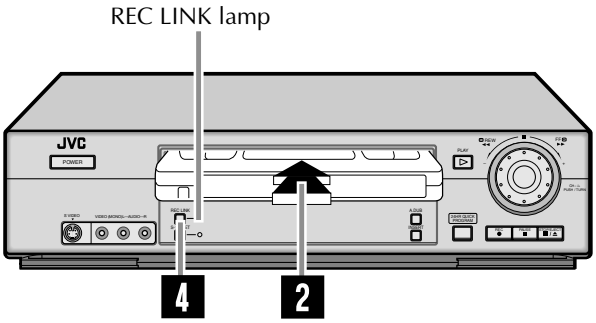

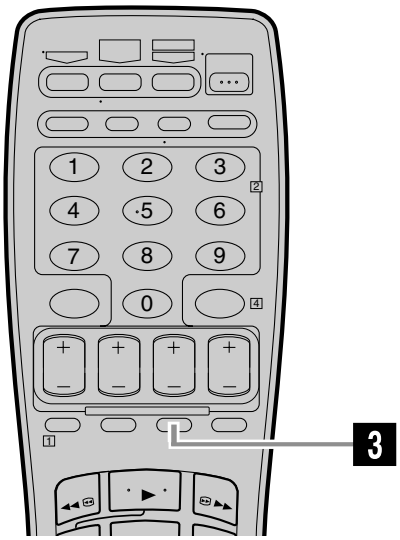

1 Set timer program on DBS receiver

• For timer programing method, refer to the manual supplied with the DBS receiver.

2 Load a cassette

Make sure the record safety tab is intact.

3 Set tape speed

Press **SP/EP (/////)** to set the recording speed.

4 Engage Satellite Auto Recording standby mode

Press **REC LINK**.
The VCR turns off automatically and the REC LINK lamp lights (Satellite Auto Recording standby mode).
When signals come into the VCR from the DBS receiver, the VCR starts recording (the REC LINK lamp blinks), and stops recording and goes off when signals stop coming in.

• Each time you press the button, Satellite Auto Recording standby mode turns on and off. When it is off, the REC LINK lamp goes off.

IMPORTANT: Be sure not to turn on the DBS receiver before the program starts broadcasting; otherwise, the VCR will start recording when the DBS receiver is turned on.

NOTES:

- *While the Satellite Auto Recording standby mode or after Satellite Auto Recording is finished, the VCR will not enter the timer recording standby mode even though "AUTO TIMER" is set to "ON". (☞ pg. 40)*
- *If you turn off this VCR while Satellite Auto Recording is in progress, recording stops.*
- *Video Calibration (☞ pg. 40) does not work while Satellite Auto Recording is in progress.*
- *Auto Clock (☞ pg. 11) does not work while in the Satellite Auto Recording standby mode.*
- *The VCR may not record a short portion at the beginning of the program or may record slightly longer than the actual length of the program when Satellite Auto Recording method is used.*
- *If you engage the Satellite Auto Recording standby mode while the DBS receiver is turned on, the VCR will not start Satellite Auto Recording even though the REC LINK lamp blinks. When you turn off and on the DBS receiver once again, the VCR starts recording.*
- *If you have connected another component other than a DBS receiver (or cable box) to the AUDIO/VIDEO IN or S VIDEO IN (L-1) connectors, be sure not to engage the Satellite Auto Recording standby mode; otherwise, the VCR will start recording when the connected component is turned on.*
- *Satellite Auto Recording and timer-recording cannot be performed at the same time.*
- *If the REC LINK lamp does not light but blinks quickly in the Satellite Auto Recording standby mode (even though your DBS receiver is turned off), Satellite Auto Recording will not work properly.*
  If this is the case, perform "Express Timer Programing" (☞ pg. 34) to timer-record a satellite program.
  (Some DBS receivers output signals even if the power is off. Satellite Auto Recording is not possible with those DBS receivers.)

Child Lock

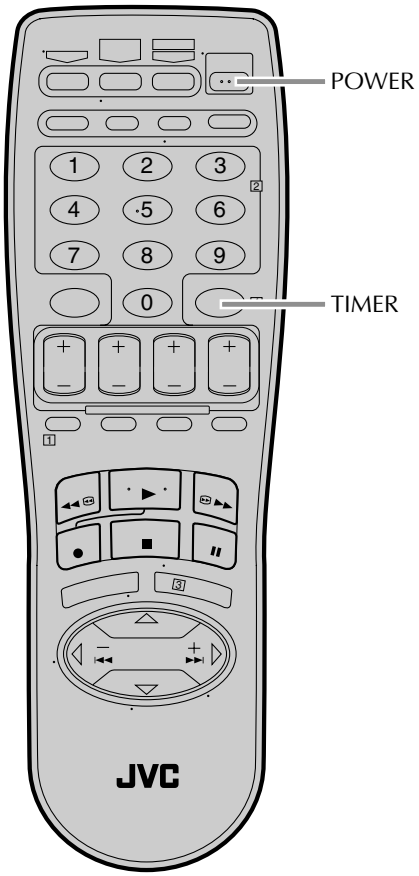

You can disable the VCR operations.
- You can only use the Remote for this operation.

While the VCR is turned on, press and hold POWER on the Remote for more than 10 seconds.
The VCR turns off, and "CL" appears on the front display panel for about 5 seconds, then the clock time appears again.

- The child lock function is now activated and you cannot turn on the VCR by pressing **POWER** on the front panel.

To release the child lock, press and hold **POWER** on the Remote until the VCR turns on.
- Pressing **TIMER** during timer recording, unplugging the AC power cord or a power outage also releases the child lock.

NOTES:

- *When the child lock function is in use, keep the Remote out of the children's reach.*
- *Timer recording programs will be performed even if the child lock function is activated.*
- *If any button on the VCR or on the Remote is pressed when the child lock function is activated, "CL" appears on the front display panel for about 5 seconds, then the clock time appears again.*

Edit From Camcorder

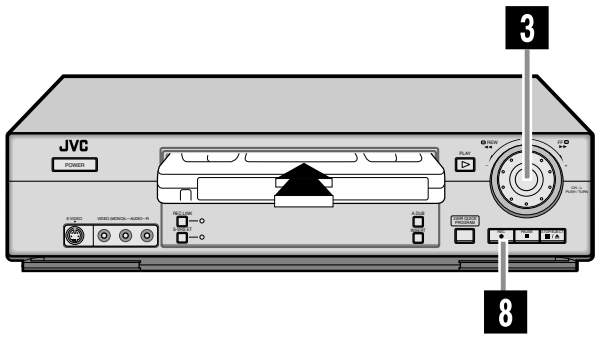

Connection

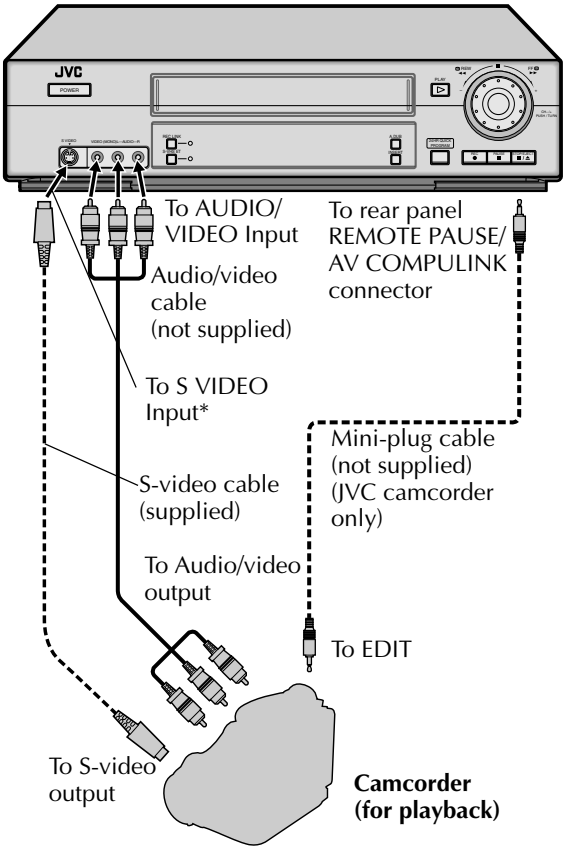

* For HR-S3900U/3910U, the S VIDEO input connector is located on the rear panel.

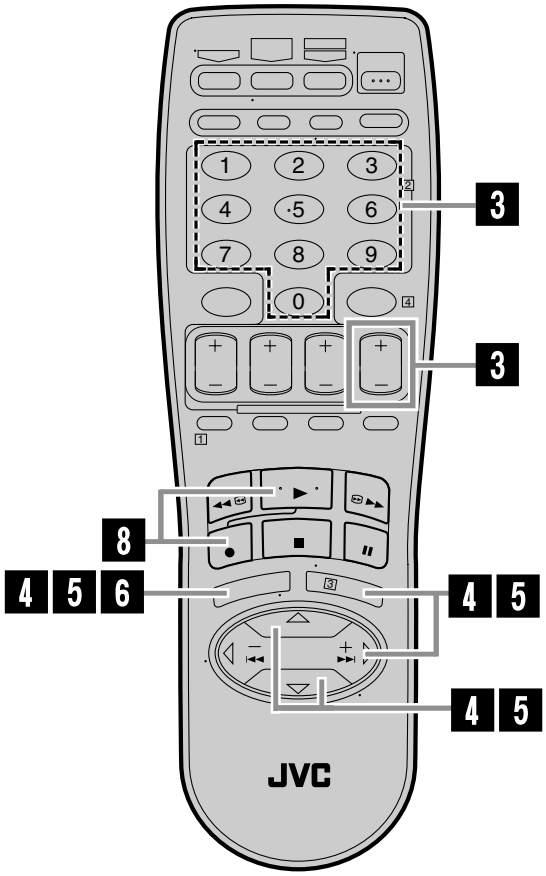

Various connection for editing tapes

The following three methods can be used for editing tapes.

- ***VHS to S-VHS editing (VIDEO-VIDEO connection)**: Although the picture quality is inherently limited by the original VHS quality, the edited tape has better picture quality than those made by VHS-to-VHS editing.*
- ***S-VHS to VHS editing (VIDEO-VIDEO connection)**: Since the original source is recorded in S-VHS mode, the edited tape has better picture quality than those made by VHS-to-VHS editing.*
- ***S-VHS to S-VHS (S-VIDEO connection)**: Original picture quality of S-VHS made can be duplicated with minimal picture degradation. This is the best editing method you can use on S-VHS VCRs.*

You can use a camcorder as the playback VCR and your VCR as the recording VCR

1 Make connections

Connect an audio/video cable between the camcorder's audio/video output connectors and your VCR's audio/video input connectors.

- When the JVC camcorder is equipped with the Master Edit Control, you can control the VCR from the camcorder. Connect the mini-plug cable (not supplied with this VCR) as illustrated to the left.
- When using a camcorder with a monaural output, connect the audio output connector on the camcorder to the left audio input connector on this VCR.

2 Load a cassette

Insert the cassette to be recorded on into this VCR (for recording).

3 Select input mode on this VCR

Select "L-1" — when connecting the camcorder to the audio/video input connectors on the rear panel.
Select "F-1" — when connecting the camcorder to the audio/video input connectors on the front panel.

On the front panel:
Push the **JOG** dial, then turn it to the left or right.

On the Remote:
Press the **Number** key "**0 (AUX)**" or **CH +/–**.

4 Select video input terminal

Follow the procedure described on pages 39 and 43.

When using S VIDEO terminal, set "FRONT AUX INPUT" (or "REAR AUX INPUT" if you use the connectors on the rear) to "S-VIDEO".

When using VIDEO terminal, set "FRONT AUX INPUT" (or "REAR AUX INPUT") to "VIDEO".

5 Set "PICTURE CONTROL" to "EDIT"

Follow the procedure described on pages 39 and 40.

<u>If your camcorder is a JVC Master Edit Control-equipped type</u> — go to step 6.
<u>If your camcorder is NOT a JVC Master Edit Control-equipped type</u> — go to step 7.

6 Set "AV COMPU-LINK" to "OFF"

Follow the procedure described on pages 39 and 42.

- The REMOTE PAUSE/AV COMPU-LINK connector works as the Remote Pause connector when "AV COMPU-LINK" is set to "OFF".

7 Return to normal screen

Press **MENU**.

8 Start playback

Press **PLAY (►)** on the camcorder.

NOTE:
If the camcorder is equipped with a superimpose/OSD disable feature then set it to "OFF" before starting playback.

9 Start recording

On the front panel:
Press **REC (●)**.

On the Remote:
Press **REC (●)** and **PLAY (►)** at the same time.

- If you are using a Master Edit Control-equipped JVC camcorder, recording starts automatically on this VCR. (Refer to camcorder's instruction manual.)

NOTE:
Be sure to select "AUTO" for "PICTURE CONTROL" (or "NORM" when "VIDEO CALIBRATION" is set to "OFF") after you finish dubbing the tapes (☞ pg. 39 and 40).

Edit To Or From Another VCR

Connection

Ex. When using this VCR as the playback VCR

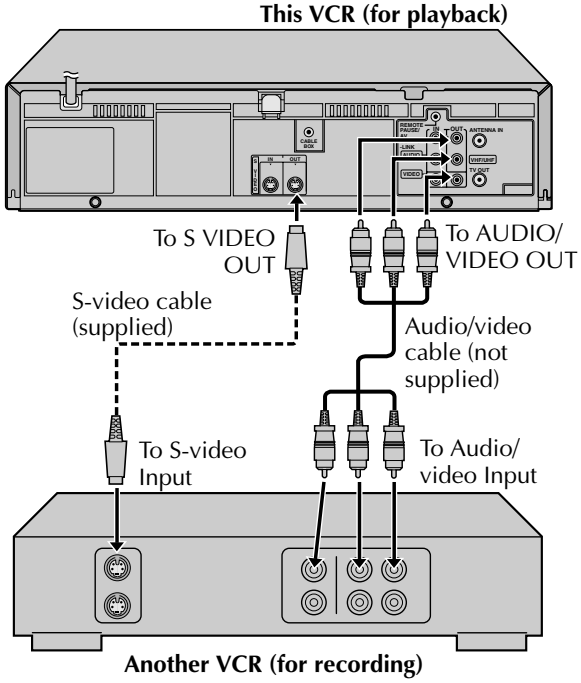

You can use your VCR as the playback or recording VCR.

- Refer also to the other VCR's instruction manual for connection and its operations.

1 Make connections

Connect an audio/video cable between the playback VCR's audio/video output connectors and the recording VCR's audio/video input connectors.

- When using this VCR as the recording VCR, connect this VCR's audio/video input connectors to the audio/video output connectors on the other VCR.
  If the playback VCR is monaural, connect the audio output connector on the playback VCR to the left audio input connector on this VCR.

2 Load cassettes

Insert the playback cassette into the playback VCR and the cassette to be recorded on into the recording VCR.

3 Select input mode on recording VCR

Select the correct external input on the other VCR.

- On this VCR (when using this VCR as the recording VCR);
  Select "L-1" — when connecting the other VCR to the audio/video input connectors on the rear panel;
  Select "F-1" — when connecting the other VCR to the audio/video input connectors on the front panel.

  On the front panel:
  Push the **JOG** dial, then turn it to the left or right.

  On the Remote:
  Press the **Number** key "**0 (AUX)**" or **CH +/–**.

4 Select video input terminal on recording VCR

When using this VCR as the recording VCR, follow the procedure described on pages 39 and 43.

When using S VIDEO terminal, set "FRONT AUX INPUT" (or "REAR AUX INPUT" if you use the connectors on the rear) to "S-VIDEO".

When using VIDEO terminal, set "FRONT AUX INPUT" (or "REAR AUX INPUT") to "VIDEO".

5 Select edit mode

Set the edit mode to "ON" for the VCRs if such a mode is equipped.

- On this VCR, set "PICTURE CONTROL" to "EDIT" by following the procedure described on pages 39 and 40.

6 Start playback

Press **PLAY (►)** on the playback VCR.

NOTE:

If the playback VCR is equipped with a superimpose/ OSD disable feature then set it to "OFF" before starting playback (☞ pg. 39 and 40).

7 Start recording

Press **REC (●)** on the recording VCR.

NOTE:

Be sure to select "AUTO" for "PICTURE CONTROL" (or "NORM" when "VIDEO CALIBRATION" is set to "OFF") after you finish dubbing the tapes (☞ pg. 39 and 40).

Audio Dubbing

(ONLY FOR HR-S5900U/5910U)

Connection

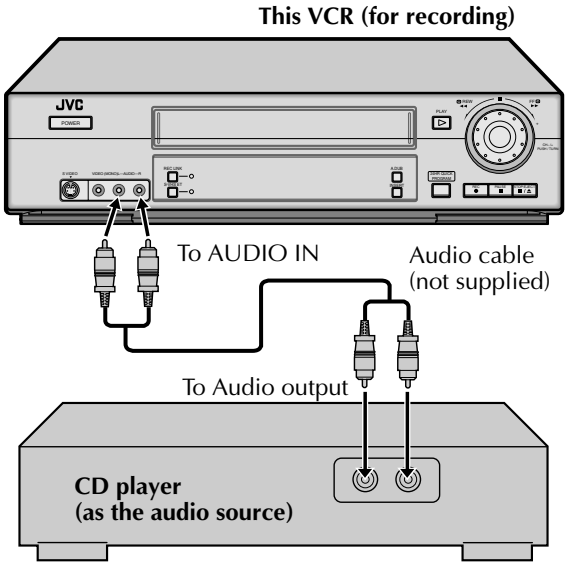

- *Audio Dubbing is also possible using the audio input connectors on the rear panel.*

You can replace sounds recorded on the normal track with new sounds — for example, your favorite song played back on the CD player.

- Refer also to the other audio component's instruction manual for connection and its operations.

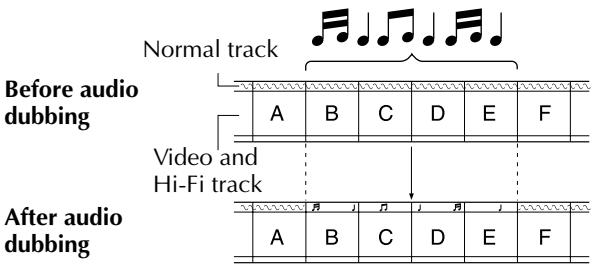

1 Make connections

Connect an audio cable between the VCR's audio input connectors and the audio component's audio output connectors.

- If the audio component is monaural, connect the AUDIO L (MONO) input connector on the VCR.

2 Load a cassette and prepare the audio source

3 Select input mode

Select "F-1" — when connecting the audio component to the audio input connectors on the front panel.

Select "L-1" — when connecting the audio component to the audio input connectors on the rear panel.

On the front panel:
Push the **JOG** dial, then turn it to the left or right.

On the Remote:
Press the **Number** key "**0 (AUX)**" or **CH +/–**.

4 Locate start point

❶ Press **PLAY (►)** to start playback.
❷ Press **PAUSE (❚❚)** when you find the beginning of the scene for which you want to audio-dub.

5 Activate editing mode

Press **A.DUB** on the front panel.

- The VCR enters the Audio Dubbing pause mode.
- ◯ blinks, ▷ and ▦ light up on the front display panel.

6 Start audio dubbing

Press **PLAY (►)** on this VCR and start playing the audio source.

- ◯ blinks and ▷ is displayed on the front display panel.

To stop audio dubbing

Press **STOP (■)** on the Remote or **STOP/EJECT (■ / ⏏)** on the front panel.

- Audio dubbing automatically stops when the counter reading becomes "0:00:00", and the VCR starts normal playback.

NOTES:

- *During Audio Dubbing, the sound recorded on the normal track is selected as the monitor sound. If you want to listen to the Hi-Fi or mixed sound (Hi-Fi sound and monaural sound), see "Selecting monitor sound — Audio Monitor" (☞ pg. 23).*
- *Audio Dubbing cannot be performed on a tape with its record safety tab removed.*
- *When playing back an audio-dubbed tape, select the sound you want. See "Selecting monitor sound — Audio Monitor" (☞ pg. 23).*
- *Picture may be distorted if you pause Audio Dubbing.*

Insert Editing and AV Dubbing

(ONLY FOR HR-S5900U/5910U)

Connection

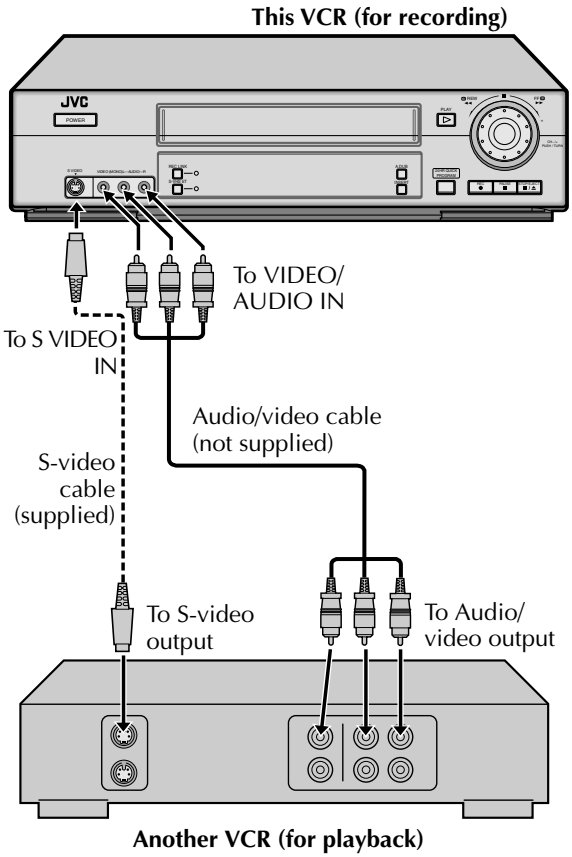

- *Insert Editing and AV Dubbing are also possible using the audio/video connectors on the rear panel.*

Refer also to the other component's instruction manual for connection and its operations.

Insert Editing: You can replace a recorded scene with new scene recorded on another tape or with other material. Both the picture and the sound recorded on the Hi-Fi sound track are replaced at the same time.

Audio/Video Dubbing: You can perform Audio Dubbing and Insert Editing at the same time. This means that the picture and the sounds recorded on the Hi-Fi sound track and on the normal track are replaced at the same time.

- For Audio/Video Dubbing, you can edit pictures and sound using different sources; connect a video source to the video input connector, and an audio source to the audio input connectors.

Insert Editing

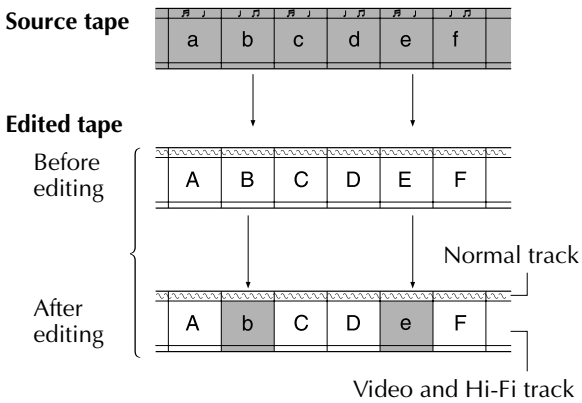

AV Dubbing

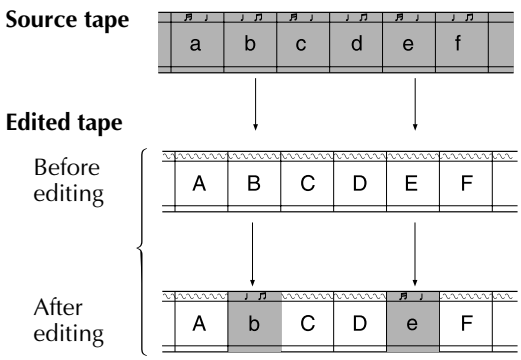

1 Make connections

Connect an audio/video cable between the VCR's audio/video input connectors and the other component's audio/video output connectors.

2 Prepare tapes

Load the source tape on the other VCR, and the tape to be edited on this VCR.

3 Select input mode

Select "F-1" — when connecting the other component to the audio/video input connectors on the front panel.
Select "L-1" — when connecting the other component to the audio/video input connectors on the rear panel.

On the front panel:
Push the **JOG** dial, then turn it to the left or right.

On the Remote:
Press the **Number** key "**0 (AUX)**" or **CH +/–**.

4 Select video input terminal

Follow the procedure described on pages 39 and 43.

When using S VIDEO terminal, set "FRONT AUX INPUT" (or "REAR AUX INPUT" if you use the connectors on the rear) to "S-VIDEO".

When using VIDEO terminal, set "FRONT AUX INPUT" (or "REAR AUX INPUT") to "VIDEO".

5 Select edit mode

Set the edit mode to "ON" for the VCRs if such a mode is equipped.

- On this VCR, set "PICTURE CONTROL" to "EDIT" by following the procedure described on pages 39 and 40.

6 Locate end point

❶ Press **PLAY (►)** to start playback.
❷ Press **PAUSE (❚❚)** when you find the end of the scene for which you want to edit.
❸ Press **C. RESET** so that the counter reading becomes "0:00:00".

NOTE:

You can also use **REW (◄◄)** *or* **JOG** *dial to locate the end point (See "Special Effect Playback": ☞ pg. 28) .*

7 Locate start point

Use **REW (◄◄)** or **JOG** dial to reverse the tape (See "Special Effect Playback": ☞ pg. 28).
When you find the begining of the scene you want to edit, press **PAUSE (❚❚)**.

8 Activate editing mode

Press **INSERT** on the front panel.

- Make sure to set the recording format (VHS, S-VHS or S-VHS ET) on the VCR is the same as that of the original recording on the tape.
- During Insert Editing pause mode (◯, ▷ and ▦ light up on the front display panel.)
- For AV Dubbing, after pressing **INSERT**, press **A.DUB** also. During AV Dubbing insert pause mode (◯ and ▷ blink, and ▦ lights up on the front display panel.)

9 Start editing

Press **PLAY (►)** on this VCR, and start playback on the other component at the same time.

- During Insert Editing mode (◯ and ▷ light up on the front display panel.)
- During AV Dubbing mode (◯ and ▷ blink on the front display panel.)
- When the counter reading becomes "0:00:00", editing automatically stops, and the VCR starts normal playback.

To stop editing any time during recording

Press **STOP (■)** on the Remote or **STOP/EJECT (■ / ⏏)** on the front panel.

NOTES:

- *Be sure to select "AUTO" for "PICTURE CONTROL" (or "NORM" when "VIDEO CALIBRATION" is set to "OFF") after you finish editing the tapes (☞ pg. 39 and 40).*
- *Editing cannot be performed on a tape with its record safety tab removed.*
- *The recording speed (SP/EP) is determined by the previous recording to be replaced. If the recording speed changes on the tape to be edited while editing the tape, the inserted picture will be distorted where the recording speed changes.*
- *When you edit a tape, a small portion of the recording preceding to the editing start point will be erased from the edited tape.*

TV Brand Setting

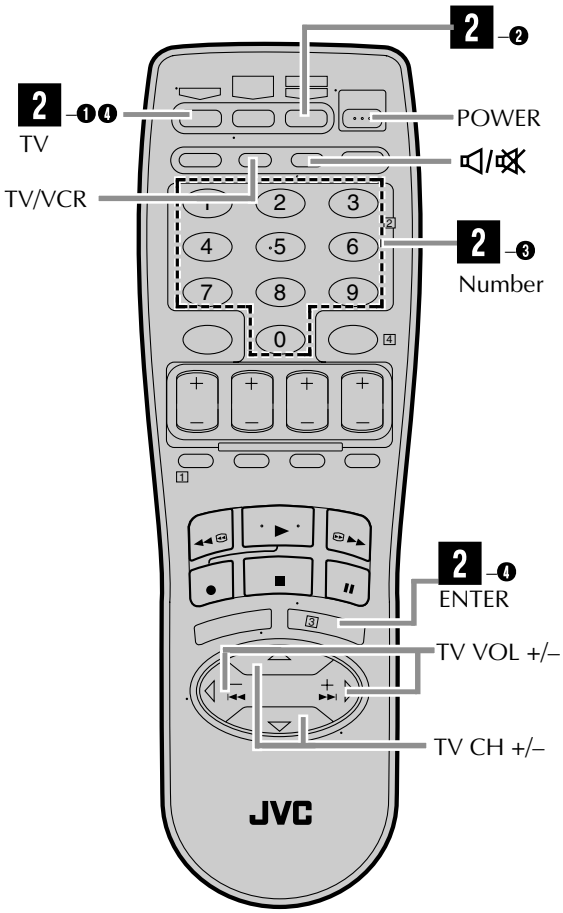

TV BRAND NAME	BRAND CODE
JVC	01, 03
HITACHI	10
MAGNAVOX	02
MITSUBISHI	03
PANASONIC	04, 11
RCA	05
SHARP	06
SONY	07
SAMSUNG	12
SANYO	13
SEARS	13
TOSHIBA	08
ZENITH	09

This Remote can control some functions of remote controllable TVs listed below. Without setting, you can control a JVC TV.

1 Turn on the TV

Turn on the TV using the Power button on the TV or its Remote.

2 Set TV brand code

Follow the example shown below.

❶ Press and hold **TV**.
❷ Press **MBR SET**.
❸ Press the **Number** keys to enter your TV's brand code by referring to the table below.
❹ Press **OK**, and release **TV**.
The TV should turn off. If it does, try other operations below. (☞ step 3).

- Once you have set the Remote to operate the TV, you do not have to set it until you replace the batteries from the Remote.
- PANASONIC has two codes. If the TV does not function with one code, try entering the other.

3 Operate TV

While holding down **TV**, press one of the following buttons: **POWER**, **TV/VCR, TV CH +/–**, 🔇/🔇 (TV Muting), **TV VOL +/–**, and **Number** keys.

- For some brands, you must press **ENTER** after having pressed the **Number** keys to enter a channel number.

NOTES:

- *Depending on the type of TV, some or all functions cannot be operated using this Remote.*
- *It's not possible to operate a TV not equipped with a remote sensor.*

(Ex.) To set Remote to RCA 05:

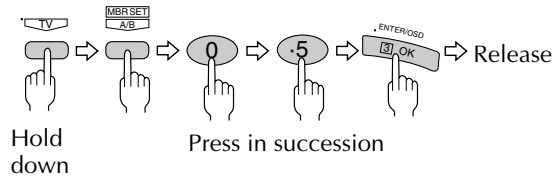

Cable Box Brand Setting

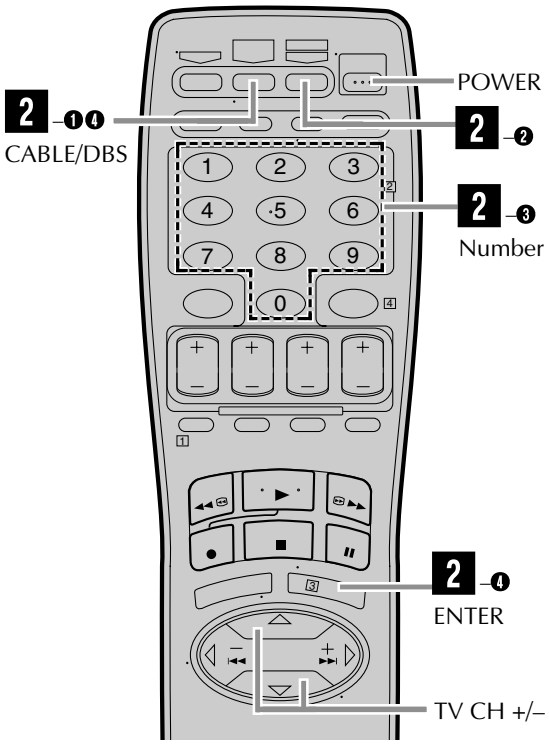

CABLE BOX BRAND NAME	BRAND CODE
ARCHER	01, 05, 17
CABLETENNA	01, 17
CABLEVIEW	15, 16, 17, 21, 25
CITIZEN	15, 16, 17, 21, 25
CURTIS	02
DIAMOND	01, 17
EASTERN	19
GC BRAND	15, 16, 17, 21, 25
GEMINI	15
GENERAL INSTRUMENTS	01, 04, 06, 11, 12, 15, 28
HAMLIN	10, 18, 19, 23
JASCO	15
JERROLD	01, 04, 06, 11, 12, 15, 28
NOVAVISION	02
OAK	07
PANASONIC	13, 14
PULSER	15, 16, 17, 21, 25
RCA	13, 14
REGAL	10, 18, 19, 23
REGENCY	19
REMBRANDT	01, 16, 17
SAMSUNG	05, 16, 24
SCIENTIFIC ATLANTA	02
SIGMA	07
SL MARX	05, 16, 17, 24, 25
SPRUCER	13, 14
STARGATE	05, 15, 16, 17, 21, 24, 25
TELEVIEW	05, 16, 24
TOCOM	01, 04, 16
UNIKA	01, 17
UNIVERSAL	16, 17, 25
VIDEOWAY	03, 09, 22
ZENITH	03, 09, 22

This Remote can control some functions of the cable boxes listed below. Some cable box brands have more than one code. If your cable box does not function with a specified code, try other codes.

1 Turn on the cable box

Turn on the cable box using the Power button on the cable box or its Remote.

2 Enter cable box brand code

Follow the example shown below.

❶ Press and hold **CABLE/DBS**.
❷ Press **MBR SET**.
❸ Press the **Number** keys to enter your cable box's brand code by referring to the table below.
❹ Press **OK**, and release **CABLE/DBS**.
The cable box should turn off. If it does, try other operations below. (☞ step 3).

- Once you have set the Remote to operate the cable box, you do not have to set it until you replace the batteries from the Remote.

3 Operate cable box

While holding down **CABLE/DBS**, press one of the following buttons: **POWER**, **TV CH +/–**, and **Number** keys.

- For some brands, you must press **ENTER** after having pressed the **Number** keys to enter a channel number.
- To change the cable box's channels, press **TV CH +/–** or the **Number** keys. (The **CH +/–** button can be used to change the VCR's channels only.)

NOTES:

- *Depending on the type of cable box, some or all functions cannot be operated using this Remote.*
- *It's not possible to operate a cable box not equipped with a remote sensor.*
- *It's not possible to set the Remote for both your cable box and a DBS receiver at the same time. You can only set the Remote control to operate one of these units at a time.*

(Ex.) To set the Remote to RCA 14:

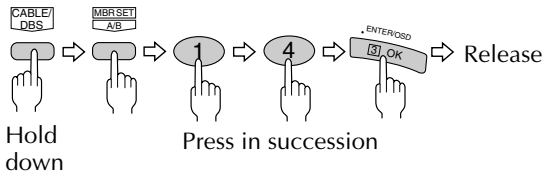

DBS Receiver Brand Setting

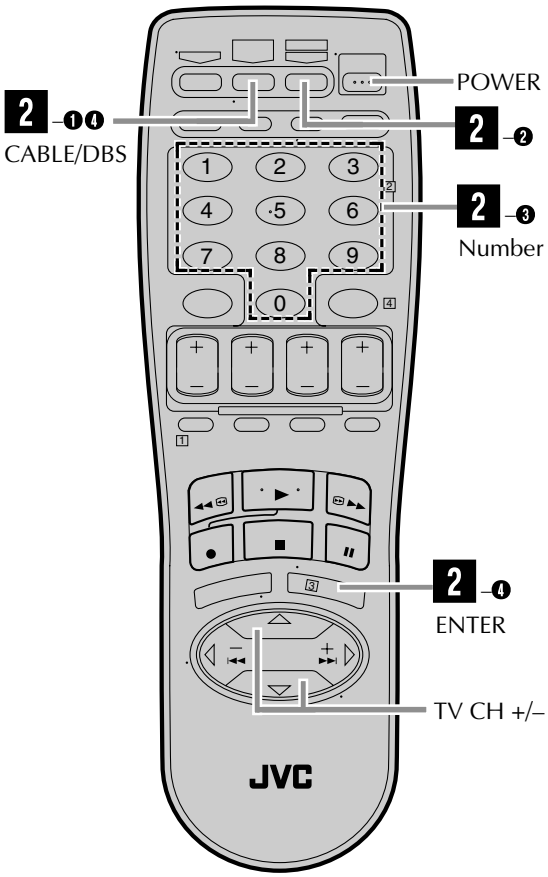

This Remote can control some functions of the DBS (Direct Broadcast Satellite) receivers listed below.

1 Turn on the DBS receiver

Turn on the DBS receiver using the Power button on the DBS receiver or its Remote.

2 Enter DBS receiver brand code

Follow the example shown below.

❶ Press and hold **CABLE/DBS**.
❷ Press **MBR SET**.
❸ Press the **Number** keys to enter your DBS receiver's brand code by referring to the table below.
❹ Press **OK**, and release **CABLE/DBS**.
The DBS receiver should turn off. If it does, try other operations below (☞ step 3).

- Once you have set the Remote to operate the DBS receiver, you do not have to set it until you replace the batteries from the Remote.

3 Operate DBS receiver

While holding down **CABLE/DBS**, press one of the following buttons: **POWER**, **TV CH +/–**, and **Number** keys.

- For some brands, you must press **ENTER** after having pressed the **Number** keys to enter a channel number.
- To change the DBS receiver's channels, press **TV CH +/–** or the **Number** keys. (The **CH +/–** button can be used to change the VCR's channels only.)

DBS BRAND NAME	BRAND CODE
JVC (DISH Network)	51
ECHOSTAR (DISH Network)	51
PRIMESTAR	50
SONY (DSS)	41
RCA (DSS)	40

NOTES:

- *Depending on the type of DBS receiver, some or all functions cannot be operated using this Remote.*
- *It's not possible to operate a DBS receiver not equipped with a remote sensor.*
- *It's not possible to set the Remote for both your DBS receiver and a cable box at the same time. You can only set the Remote to operate one of these units at a time.*

(Ex.) To set the Remote to JVC 51:

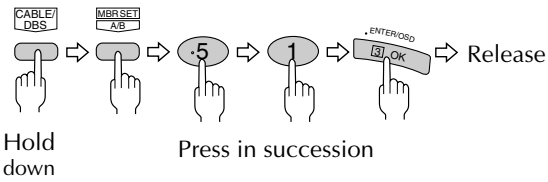

Changing Remote Control Code

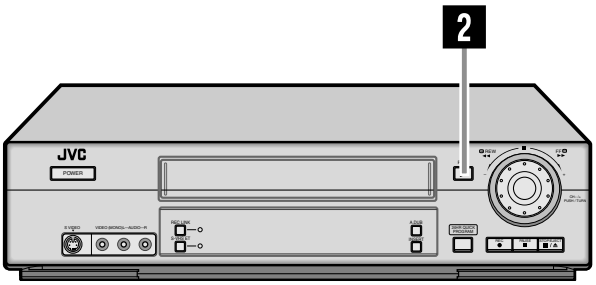

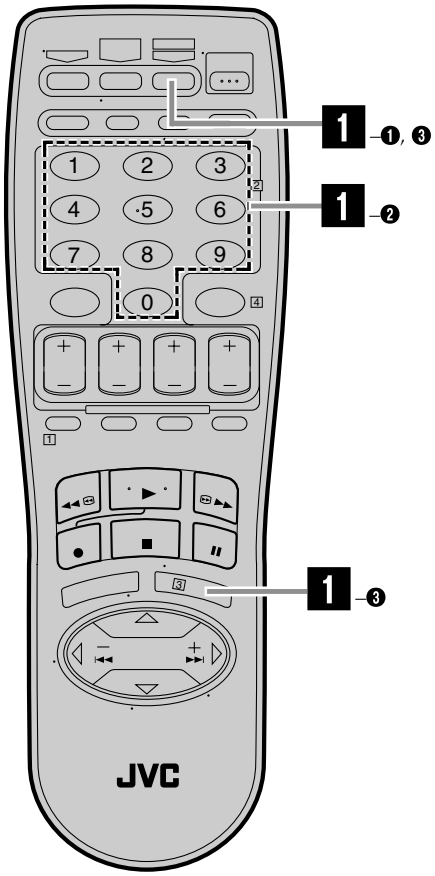

This Remote is capable of transmitting two control codes; one set to respond to A code control signals and another set to respond to B code control signals.
This Remote control is preset to send A code signals because your VCR is initially set to respond to A code signals. You can easily modify your VCR and the Remote to respond to B code signals.
When using two JVC VCRs, set two VCRs and their Remotes to different codes, so that you can operate these VCRs separately.

1 Set remote control code for Remote

❶ Press and hold **A/B**.
❷ Press the **Number** key "**2**".
❸ Press **OK**, and release **A/B**.

- The Remote now can transmit B code control signals.

2 Check remote control code for VCR

Press and hold ► on the VCR for more than 5 seconds while the VCR is turned off. The code currently set appears on the display panel.

3 Change code for VCR

Press any key on the Remote.

- The VCR now responds to B code control signals.
- To set the Remote and the VCR back to A code control signals, repeat the same procedure as shown above except pressing the **Number** key "**1**" in step ❷ of **1**.

To control two VCRs with the same Remote

You can control two JVC VCRs by switching the remote control code for the Remote between A and B (☞ step **1**), keeping two VCRs to different control codes.

- Press the **Number** key "**1**" for A code control signals and the **Number** key "**2**" for B code control signals. (To change only the remote control code for the Remote, DO NOT perform steps **2** and **3** .)

(Ex.) To set Remote to B code:

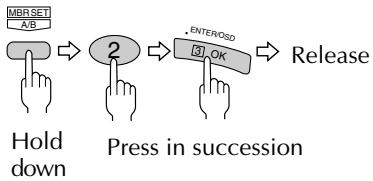

Before requesting service, use this chart and see if you can repair the trouble yourself. Small problems are often easily corrected, and this can save you the trouble of sending your VCR off for repair.

POWER

SYMPTOM	POSSIBLE CAUSE	CORRECTIVE ACTION
1. The power will not come on.	● The AC power cord is disconnected. ● Child lock is on.	Connect the AC power cord. Turn off child lock function (☞ pg. 45).
2. The clock works, but the VCR's power will not come on.	● The VCR is in the timer recording standby mode with "AUTO TIMER" set to "OFF" (☞ pg. 40). ● The child lock function is activated.	Press **TIMER** to disengage. Press and hold **POWER** for more than 10 seconds to release the child lock function (☞ pg. 45).
3. The Remote will not function.	● The batteries are discharged. ● Timer is on. ● Remote control A/B code is wrong.	Replace batteries. Press **TIMER** button on the remote. Reset A/B code (☞ pg. 55).

TAPE TRANSPORT

SYMPTOM	POSSIBLE CAUSE	CORRECTIVE ACTION
1. The cassette gets stuck partway during loading, and is ejected.	● The cassette was inserted incorrectly.	Make sure the cassette's window is facing up, the rear label side is facing you and the arrow on the front of the cassette is pointing towards the VCR. Then insert the cassette.

PLAYBACK

SYMPTOM	POSSIBLE CAUSE	CORRECTIVE ACTION
1. The tape is running but the picture will not appear.	● If the RF connection (☞ pg. 7) is used to view the picture, the channel on the TV is set incorrectly. ● If the AV connection (☞ pg. 7) is used to view the picture, the TV receiver is set to the wrong mode.	Select channel 3 or 4 on the TV. Select the AV mode on the TV.
2. Breaks are noticeable in Hi-Fi sound track.	● Automatic tracking is engaged.	Disengage auto tracking and adjust the tracking manually (☞ pg. 23).
3. The playback picture is blurred or interrupted, even though TV broadcasts are clear. Or "USE CLEANING CASSETTE" appears on the screen.	● The video heads may be dirty.	The heads must be cleaned. Use a dry cleaning cassette –TCL-2UX– or consult your JVC dealer.
4. The Hi-Fi sound cannot be heard.	● Audio Monitor setting is incorrect.	Set Audio Monitor to "HI-FI" (☞ pg. 23 or 42).

RECORDING

SYMPTOM	POSSIBLE CAUSE	CORRECTIVE ACTION
1. Recording will not start.	● There is no cassette loaded. ● The loaded cassette has had its record safety tab removed.	Insert a cassette. Remove the cassette and cover the hole with adhesive tape, or load a cassette on which the record safety tab is intact.
2. TV broadcasts will not be recorded properly.	● The VCR has been set to "L-1" or "F-1" input mode by mistake.	Select the appropriate channel on the VCR.
3. Tape-to-tape editing will not work.	● The components have been incorrectly connected, or correct video connector (S VIDEO or VIDEO) is not selected. ● The power to one or more of the units has not been turned on. ● The recording VCR's input mode has been set incorrectly.	Connect the components correctly (☞ pg. 46 – 51) or check "REAR AUX INPUT (or "FRONT AUX INPUT" only for HR-S5900U/5910U) setting (☞ pg. 43). Make sure the power to all units is on. Select the appropriate input mode on the recording VCR.

TIMER RECORDING

SYMPTOM	POSSIBLE CAUSE	CORRECTIVE ACTION
1. Timer recording will not work.	● The clock and/or the timer have been set incorrectly. ● The timer is not engaged. ● The VCR has not been set up properly.	Set the clock and/or timer correctly. Press **TIMER** and check to make sure that ◷ appears on the front display panel. Re-perform the set-up procedures. Make sure you have compensated for guide channel and VCR or cable box channel number mismatches (☞ pg. 32).
2. Timer programing will not work.	● Timer recording is in progress.	Timer programing cannot be performed when timer recording is in progress. Wait until it finishes.
3. ◷ and ▭ on the front display panel will not stop blinking.	● The timer is engaged but there is no cassette loaded.	Load a cassette with the record safety tab intact, or with the hole covered with adhesive tape.
4. The cassette is automatically ejected, and ◷ and ▭ on the front display panel will not stop blinking.	● The loaded cassette has had its record safety tab removed.	Remove the cassette and cover its hole with adhesive tape, or replace it with a cassette on which the safety tab is intact.
5. ◷ blinks for 10 seconds and the timer mode is disengaged.	● **TIMER** has been pressed when there are no programs in memory, or the timer recording program has not been set correctly.	Check the programed data and set again if necessary, then press **TIMER** again.
6. The cassette is automatically ejected, the power shuts off and ◷ and ▭ will not stop blinking.	● The tape reaches its end during timer recording.	The program may not have been recorded in its entirety. Next time be sure you have enough time on the tape to record the entire broadcast.
7. Cable channels are not automatically switched during timer recording.	● The Controller is not properly connected to the VCR. ● The output channel selected in the Cable Box Set screen is incorrect. ● The cable box is turned off.	Connect the Controller correctly (☞ pg. 15). After confirming your cable box's output channel number, re-access the Cable Box Set screen and select the correct number (☞ pg. 16). Make sure the power is on before timer recording starts.
8. Satellite channels are not automatically switched during timer recording.	● The Controller is not properly connected to the VCR. ● The output channel selected in the DBS Receiver Set screen is incorrect. ● The VCR is not set correctly to control the DBS receiver. ● The DBS receiver is turned off.	Connect the Controller correctly (☞ pg. 18). After confirming your DBS receiver's output channel number, re-access the DBS Receiver Set screen and select the correct number (☞ pg. 19). Set the correct DBS receiver brand code (☞ pg. 20). Make sure the power is on before timer recording starts.
9. Timer recording begins as scheduled, but the channel is always incorrect.	● Even though you do not use an external cable box or DBS receiver, "CABLE BOX SET" is set to "ON" or "DBS RECEIVER SET" is set to "ON".	Set "CABLE BOX SET" to "OFF" (☞ pg. 16) or "DBS RECEIVER SET" is set to "OFF" (☞ pg. 19).
10. You moved, and now VCR Plus+ does not work properly.	● The receivable stations in the new area are received on different channels than those in the previous area.	Re-perform the Changing VCR Plus+ Setting procedure (☞ pg. 32).
11. "PROGRAM FULL" is displayed on the screen.	● All 8 programs of the VCR's timer memory are used.	Wait until a space in memory clears, or cancel unnecessary program information (☞ pg. 37).

CONTINUED ON NEXT PAGE ➡

OTHER PROBLEMS

SYMPTOM	POSSIBLE CAUSE	CORRECTIVE ACTION
1. When scanning channels, some of them are skipped over.	● Those channels have been preset to be skipped.	If you need the skipped channels, restore them (☞ pg. 14).
2. The channel cannot be changed.	● Recording is in progress.	Press **PAUSE (❚❚)** to pause the recording, change channels, then press **PLAY (►)** to resume recording.
3. The Remote will not operate your TV or cable box or DBS receiver.	● The brand codes are set incorrectly.	Reset the correct brand codes (☞ pg. 52, 53 or 54).
4. Even though Auto or Semiauto Clock Set has been performed, the clock is incorrect.	● The clock setting data received from the host channel is incorrect.	Select a different host channel during Semiauto Clock Set (☞ pg. 11), or perform Manual Clock Set (☞ pg. 12).

MOISTURE CONDENSATION

Moisture in the air will condense on the VCR when you move it from a cold place to a warm place, or under extremely humid conditions—just as water droplets form on the surface of a glass filled with cold liquid. Moisture condensation on the head drum will cause damage to the tape. In conditions where condensation may occur, keep the VCR turned on for a few hours to evaporate the moisture before inserting a tape.

ATTENTION

This VCR contains microcomputers. External electronic noise or interference can cause microcomputer to malfunction. If the VCR does not operate correctly switch its power off and unplug the AC power cord from the AC supply. Wait for a while and then plug the power back in. Eject and check the condition of the cassette. If everything appears normal, you can operate the VCR as usual.

Questions and answers

PLAYBACK

Q. What happens if the tape reaches its end during playback or search?
A. The VCR automatically rewinds it to the beginning.

Q. Can the VCR indefinitely remain in still mode?
A. No. It stops automatically after 5 minutes to protect the heads.

Q. During picture search, still picture playback and frame-by-frame playback, the picture is intermittent. What's the cause?
A. Picture loss occurs when these types of playback are attempted with a tape recorded in LP mode. Pressing **PLAY (►)** to return to normal playback will restore the picture.

Q. When returning from variable-speed picture search to normal playback, the picture is disturbed. Should I be concerned about this?
A. No, it is normal.

Q. When playing back programs that have been timer-recorded consecutively (such one program from 8:00 to 9:00 and another one from 9:00 to 10:00), the picture and sound become momentarily distorted where the first program ends and the second program begins. Is this a malfunction?
A. No. This is normal.

Q. Other than preventing further recording, what effect does removing the safety tab have?
A. It disables marking of index codes.

Q. Sometimes, during index search, the VCR cannot find the program I want to see. Why not?
A. There may be index codes too close together.

Q. During playback, on-screen display sometimes jitters. Why does this happen?
A. If the condition of the tape being played back is not good, jittering of the video (including on-screen display) may occur.

RECORDING

Q. When I pause and then resume a recording, the end of the recording before the pause is overlapped by the new recording. Why does this happen?
A. This is normal. It reduces distortion at the pause and resume points.

Q. Can the VCR indefinitely remain in the recording pause mode?
A. No. The VCR automatically stops after 5 minutes to protect the heads. When paused during Instant Timer Recording (ITR), the VCR shuts off automatically after 5 minutes.

Q. What happens if the tape reaches its end during recording?
A. Recording stops and ⊡ on the front display panel blinks.

TIMER RECORDING

Q. REC and ◷ remain lit on the front display panel. Is there a problem?
A. No. This is a normal condition for a timer recording in progress.

Q. Can I program the timer while I'm watching a tape or a TV broadcast?
A. Yes, but while you are setting the timer you will not see the tape's or broadcast program's picture as it is replaced by the on-screen menu. (The sound from the tape or broadcast program will be heard during the timer setting.)

List of terms

This guide serves as a quick way to locate frequently used terms and on-screen display names.

A

Accidental erasure prevention 26
AUDIO MONITOR 42
Audio Monitor 23
Auto Daylight Saving Time 11
AUTO SP → EP TIMER 41
AUTO TIMER 40
Automatic tracking 23
AV COMPU-LINK 42

B

Basic connections
- AV connection 6
- RF connection 6
- S-video connection 6

BLUE BACK 41

C

Cable box control setting 15
- Brand 16
- Installing Controller 15
- Output channel 16

Channel No. indication 26
Clock setting 10
- Manual setting 12
- Preparation 10
- Semiauto setting 11

Clock time 22, 26
Contents 5
Counter reset 22, 26

D

DBS receiver control setting 18
- Brand 19
- Installing Controller 18
- Output channel 19

E

Editing
- From a camcorder 46
- From another VCR 48
- To another VCR 48

Express timer programing 34

F

FRONT AUX INPUT 43
Function Set screen 39

G

Guide channel 32

H

Host channel 8

I

Index Search 24
Instant Review 24
Instant Timer Recording (ITR) 26

L

Language setting 9

M

Manual tracking 23
Multi-Brand Remote
- Setting cable box brand 53
- Setting DBS receiver brand 54
- Setting TV brand 52

N

Next Function Memory 23

O

On-screen display 27

P

PBS channel 8
PICTURE CONTROL 40
Playback 21
Plug & Play 8

R

REAR AUX INPUT 43
Recording 25
Repeat play 22

S

S-VHS MODE 42
Satellite Auto Recording 44
Special effect playback
- Frame-by-Frame Playback 29
- High-Speed Picture Search 28
- How to use the JOG dial 28
- How to use the SHUTTLE PLUS buttons 29
- Picture Search 28
- Skip Search 29
- Slow Motion Playback 29
- Still Picture Playback 29
- Variable-Speed Picture Search 28

Specifications 65
SUPERIMPOSE 40

T

Tape speed 25, 44
Time counter 22, 26
Time zone selection 11
Timer recording
- Canceling 37
- Changing 37
- Checking 37
- Express 34
- Guide channel setting 32
- VCR Plus+ 30

Timer warning display 36
Tracking 23
Troubleshooting 56
Tuner setting
- Adding channels 14
- Auto Channel Set 13
- Deleting channels 14
- Manual Channel Set 14

V

VCR Plus+ timer programing 30
VIDEO CALIBRATION 40
VIDEO STABILIZER 41

24HR quick programing 36
2ND AUDIO RECORD 41

Front panel (HR-S5900U/5910U)

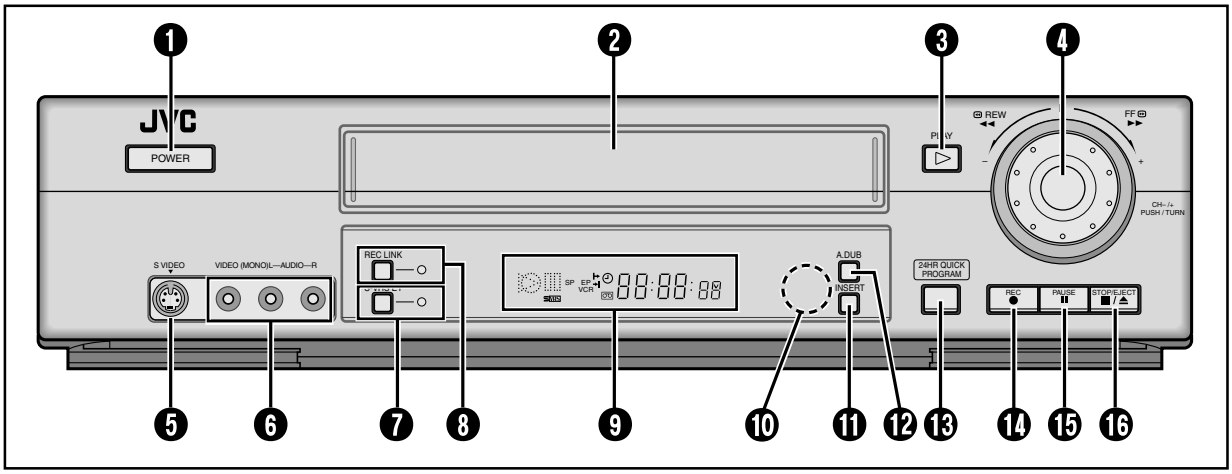

Front panel (HR-S3900U/3910U)

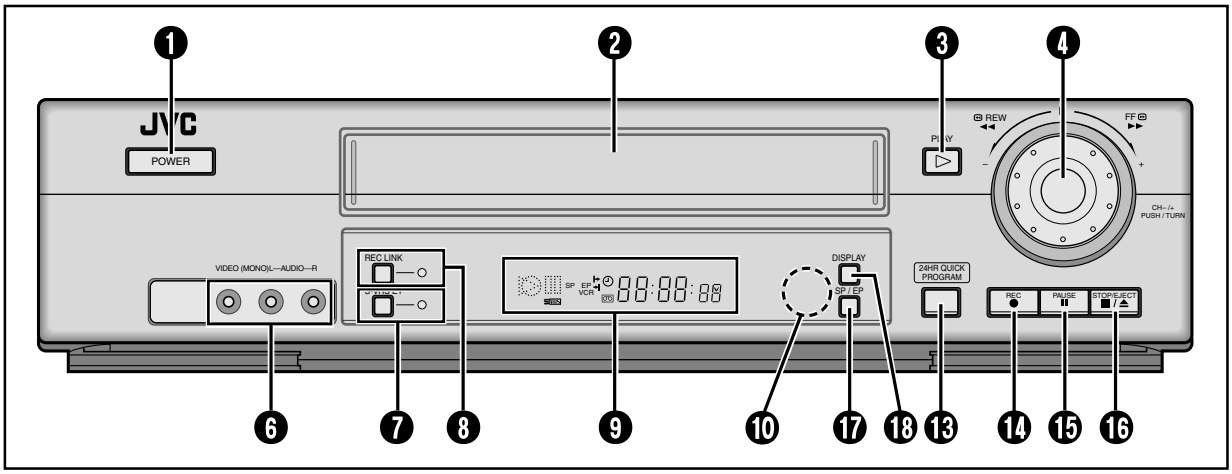

❶ POWER button : ☞ pg. 21, 25
❷ Cassette loading slot
❸ PLAY (▷) button : ☞ pg. 21
❹ Advanced JOG dial : ☞ pg. 21, 25, 28
❺ S VIDEO input connector (ONLY FOR HR-S5900U/5910U) : ☞ pg. 46, 50
❻ AUDIO/VIDEO input connectors : ☞ pg. 49, 50
❼ S VHS ET button and lamp : ☞ pg. 27
❽ REC LINK button and lamp : ☞ pg. 44
❾ Front display panel : ☞ pg. 62
❿ Remote sensor
⓫ INSERT button (ONLY FOR HR-S5900U/5910U) : ☞ pg. 51
⓬ A.DUB button (ONLY FOR HR-S5900U/5910U) : ☞ pg. 49
⓭ 24HR QUICK PROGRAM button : ☞ pg. 36
⓮ REC (●) button : ☞ pg. 25, 26
⓯ PAUSE (❚❚) button : ☞ pg. 25, 29
⓰ STOP/EJECT (■ / ⏏) button : ☞ pg. 21, 25
⓱ SP/EP button (ONLY FOR HR-S3900U/3910U) : ☞ pg. 25, 31, 35
⓲ DISPLAY button (ONLY FOR HR-S3900U/3910U) : ☞ pg. 22, 26

Front display panel

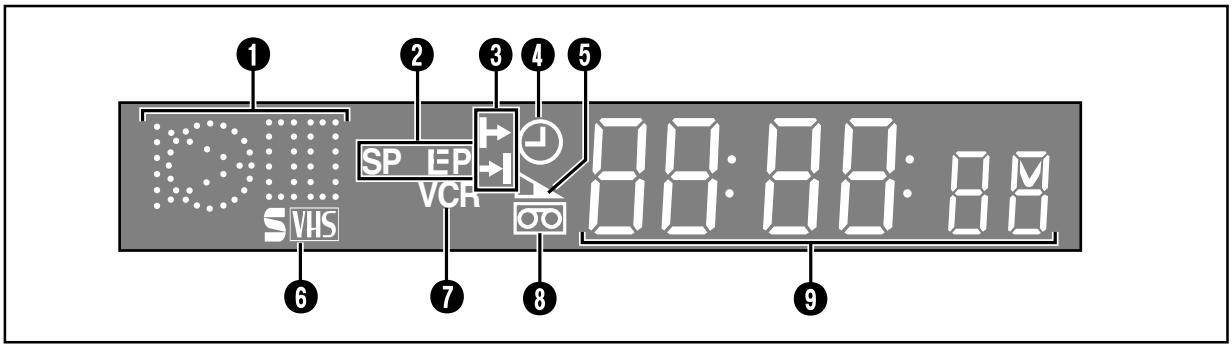

❶ Symbolic Mode Indicators

PLAY: FF/REW VARIABLE SHUTTLE SEARCH:		STILL: SLOW:	
		RECORD:	
		RECORD PAUSE:	
AUDIO DUBBING*:			
AUDIO DUBBING PAUSE*:			
INSERT*:			
INSERT PAUSE*:			
AUDIO DUBBING INSERT*:			
AUDIO DUBBING INSERT PAUSE*:			

* ONLY FOR HR-S5900U/5910U.

❷ Tape speed indicators
❸ Program start time and stop time indicator : ☞ pg. 36
❹ Timer mode indicator : ☞ pg. 31, 35
❺ Tape remaining time indicator : ☞ pg. 22, 26
❻ S-VHS indicator : ☞ pg. 21, 27
❼ VCR mode indicator : ☞ pg. 25, 26
❽ Cassette mark
❾ Channel and auxiliary input (“L-1” and “F-1”)
Counter reading : ☞ pg. 22, 26
Clock time : ☞ pg. 22, 26

Rear panel

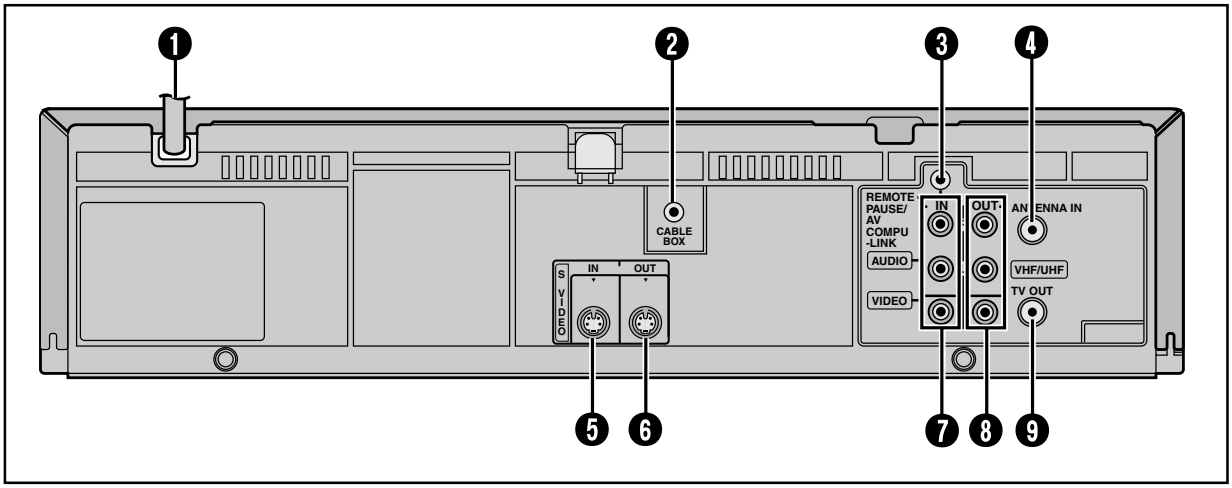

❶ AC power cord : ☞ pg. 6
❷ CABLE BOX Controller connector : ☞ pg. 15, 18
❸ REMOTE PAUSE/AV COMPULINK terminal
- REMOTE PAUSE terminal : ☞ pg. 42, 46
- AV COMPULINK terminal : ☞ pg. 42

❹ ANTENNA IN terminal : ☞ pg. 6
❺ S VIDEO IN connector : ☞ pg. 50
❻ S VIDEO OUT connector : ☞ pg. 6
❼ AUDIO/VIDEO IN connectors : ☞ pg. 50
❽ AUDIO/VIDEO OUT connectors : ☞ pg. 48
❾ TV OUT terminal : ☞ pg. 6

On-screen display

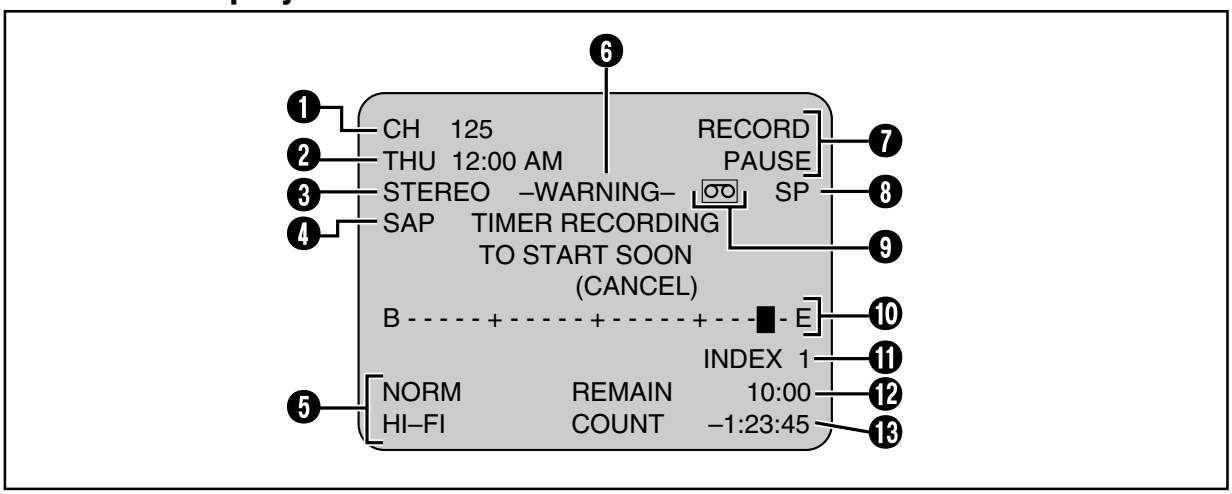

❶ Channel and auxiliary input (“L-1” and “F-1”)
❷ Day and clock time
❸ STEREO program indication : ☞ pg. 27
❹ SAP (Second Audio Program) indication : ☞ pg. 27
❺ Audio monitor indications : ☞ pg. 23, 42
❻ Timer warning display : ☞ pg. 36

❼ VCR operation mode indication
❽ Tape speed indication
❾ Cassette indication
❿ Tape position indicator : ☞ pg. 22
⓫ Index no. indication : ☞ pg. 24
⓬ Tape remaining time : ☞ pg. 22, 26
⓭ Time counter : ☞ pg. 22, 26

Remote

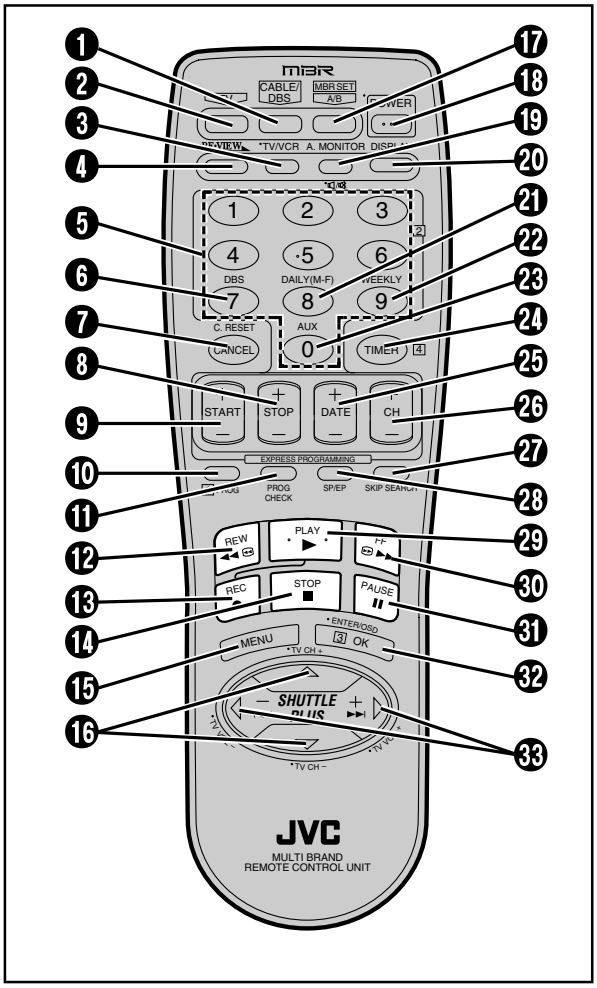

The glow-in-the-dark buttons shown in white on the illustration above are helpful when using the Remote in darkened rooms.

Buttons with a small dot on the left side of the name can also be used to operate your TV while holding down **TV** on the Remote. (☞ pg. 52).

❶ CABLE/DBS button : ☞ pg. 53, 54
❷ TV button: ☞ pg. 52
❸ TV/VCR button : ☞ pg. 25, 26, 52
❹ REVIEW button : ☞ pg. 24
❺ Number buttons : ☞ pg. 25, 30, 33
❻ DBS button : ☞ pg. 35
❼ CANCEL button : ☞ pg. 31, 37
C. (Counter) RESET button : ☞ pg. 22, 26
❽ STOP +/– button : ☞ pg. 31, 34
❾ START +/– button : ☞ pg. 34
❿ PROG. (Program) button : ☞ pg. 30, 34
⓫ PROG. CHECK button : ☞ pg. 37
⓬ REW (◄◄) button : ☞ pg. 21, 25, 28
⓭ REC (●) button : ☞ pg. 25, 26
⓮ STOP (■) button : ☞ pg. 21, 25
⓯ MENU button
⓰ SHUTTLE PLUS △▽ buttons
TV CH +/– buttons : ☞ pg. 52, 53, 54
⓱ MBR SET button : ☞ pg. 52, 53, 54
A/B button : ☞ pg. 55
⓲ POWER button : ☞ pg. 21, 25
⓳ A. (Audio) MONITOR button : ☞ pg. 23
🔊/🔇 (TV Muting) button : ☞ pg. 52
⓴ DISPLAY button : ☞ pg. 22, 26
㉑ DAILY (M-F) button : ☞ pg. 31, 35
㉒ WEEKLY button : ☞ pg. 31, 35
㉓ AUX button : ☞ pg. 47, 48, 49, 51
㉔ TIMER button : ☞ pg. 31, 35, 37
㉕ DATE +/– button : ☞ pg. 34
㉖ CH +/– button : ☞ pg. 25, 34
㉗ SKIP SEARCH button : ☞ pg. 29
㉘ SP/EP button : ☞ pg. 25, 31, 35
㉙ PLAY (►) button: ☞ pg. 21, 25
㉚ FF (►►) button: ☞ pg. 21, 25, 28
㉛ PAUSE (❚❚) button: ☞ pg. 25, 29
㉜ OK button
ENTER button : ☞ pg. 52, 53, 54
OSD button : ☞ pg. 27
㉝ SHUTTLE PLUS ⏮ ⏭ (◁ ▷) button
: ☞ pg. 29
TV VOL +/– button : ☞ pg. 52

How to use the Remote

Before use, insert two AA size batteries into the Remote with the polarity (⊕ and ⊖) matched correctly as indicated on the battery compartment or on the lid.

The Remote can operate most of your VCR's functions, as well as basic functions of TV sets, cable boxes and DBS receivers.

- Point the Remote toward the remote sensor on the target component.
- The maximum operating distance of the remote control is about 8 m.

NOTE:

If the Remote does not work properly, remove its batteries, wait for a few seconds, replace the batteries and then try again.

GENERAL

Power requirement	: AC 120 V∿ , 60 Hz
Power consumption	
Power on	: 20 W
Power off	: 2.5 W
Temperature	
Operating	: 5°C to 40°C (41°F to 104°F)
Storage	: –20°C to 60°C (–4°F to140°F)
Operating position	: Horizontal only
Dimensions (W x H x D)	: 400 x 94 x 283 mm
Weight	: 3.3 kg
Format	: S-VHS/VHS NTSC standard
Maximum recording time	
SP	: 210 min. with ST-210 video cassette
EP	: 630 min. with ST-210 video cassette

VIDEO/AUDIO

Signal system	: NTSC-type color signal and EIA monochrome signal, 525 lines/60 fields
Recording/ Playback system	: DA-4 (Double Azimuth) head helical scan system
Signal-to-noise ratio	: 45 dB
Horizontal resolution	
VHS	: 230 lines
S-VHS	: 400 lines
Frequency range	
Normal audio	: 70 Hz to 10,000 Hz
Hi-Fi audio	: 20 Hz to 20,000 Hz
Input/Output	: RCA connectors (IN x 2, OUT x 1) S-video connectors For HR-S5900U/5910U: (IN x 2, OUT x 1) For HR-S3900U/3910U: (IN x 1, OUT x 1)

TUNER

Tuning system	: Frequency-synthesized tuner
Channel coverage	
VHF	: Channels 2–13
UHF	: Channels 14–69
CATV	: 113 Channels
RF output	: Channel 3 or 4 (switchable; preset to Channel 3 when shipped) 75 ohms, unbalanced

TIMER

Clock reference	: Quartz
Program capacity	: 1-year programmable timer/ 8 programs

Memory backup for timer is not supported.

ACCESSORIES

Provided accessories	: Infrared remote control unit, "AA" battery x 2, S-video cable (4-pin), RF cable (F-type)

Specifications shown are for SP mode unless specified otherwise.
E. & O.E. Design and specifications subject to change without notice.

Usable cassettes

Full-Size VHS
T-30 (ST-30**)
T-60 (ST-60**)
T-90
T-120 (ST-120**)
T-160 (ST-160**)
ST-210**

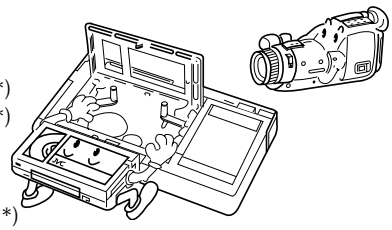

Compact VHS*
TC-20 (ST-C20**)
TC-30 (ST-C30**)
TC-40 (ST-C40**)

* Compact VHS camcorder recordings can be played on this video recorder. Simply place the recorded cassette into a VHS Cassette Adapter and it can be used just like any full-sized VHS cassette.

** This VCR can record on regular VHS and Super VHS cassettes. While only VHS signals can be recorded on regular VHS cassettes [1], both VHS and Super VHS signals can be recorded and played back using Super VHS cassettes.

[1] *By using the S-VHS ET function, it is possible to record and play back with S-VHS picture quality on VHS cassettes on this VCR.*

HOW TO LOCATE YOUR JVC SERVICE CENTER

TOLL FREE: 1-800-537-5722
http://www.jvc.com

Dear customer,

In order to receive the most satisfaction from your purchase, please read the instruction booklet before operating the unit. In the event that repair is necessary, or for the address nearest your location within the Continental United States, please call 1-800-537-5722 for your nearest authorized servicer or visit our website at www.JVC.com. Remember to retain your Bill of Sale for Warranty Service.

— JVC

JVC SERVICE & ENGINEERING COMPANY OF AMERICA

DIVISION OF JVC AMERICAS CORP.

Sophisticated electronic products may require occasional service. Just as quality is a keyword in the engineering and production of the wide array of JVC products, service is the key to maintaining the high level performance for which JVC is world famous. The JVC service and engineering organization stands behind our products.

NATIONAL HEADQUARTERS
JVC SERVICE & ENGINEERING COMPANY OF AMERICA
DIVISION OF JVC AMERICAS CORP.
10 New Maple Avenue
Pine Brook, NJ 07058-9641

ACCESSORIES

To purchase accessories for your JVC product, you may contact your local JVC Dealer.
From the 48 Continental United States call toll free: 1-800-882-2345 or on the web at www.JVC.com

Don't service the product yourself.

CAUTION

To prevent electrical shock, do not open the cabinet.
There are no user serviceable parts inside.
Please refer to qualified service personnel for repairs.

LIMITED WARRANTY

CONSUMER VIDEO 1-90

JVC COMPANY OF AMERICA warrants this product and all parts thereof, except as set forth below ONLY TO THE ORIGINAL PURCHASER AT RETAIL to be FREE FROM DEFECTIVE MATERIALS AND WORKMANSHIP from the date of original retail purchase for the period as shown below. ("The Warranty Period")

PARTS	LABOR
1 YR	**90** DAYS

THIS LIMITED WARRANTY IS VALID ONLY IN THE FIFTY (50) UNITED STATES, THE DISTRICT OF COLUMBIA AND IN COMMONWEALTH OF PUERTO RICO.

WHAT WE WILL DO:
If this product is found to be defective, JVC will repair or replace defective parts at no charge to the original owner. Such repair and replacement services shall be rendered by JVC during normal business hours at JVC authorized service centers. Parts used for replacement are warranted only for the remainder of the Warranty Period. All products and parts thereof may be brought to a JVC authorized service center on a carry-in basis except for Television sets having a screen size 25 inches and above which are covered on an in-home basis.

WHAT YOU MUST DO FOR WARRANTY SERVICE:
Return your product to a JVC authorized service center with a copy of your bill of sale. For your nearest JVC authorized service center, please call toll free: (800) 537-5722.

If service is not available locally, box the product carefully, preferably in the original carton, and ship, insured, with a copy of your bill of sale plus a letter of explanation of the problem to the nearest JVC Factory Service Center, the name and location of which will be given to you by the toll-free number.

If you have any questions concerning your JVC Product, please contact our Customer Relations Department.

WHAT IS NOT COVERED:
This limited warranty provided by JVC does not cover:
1. Products which have been subject to abuse, accident, alteration, modification, tampering, negligence, misuse, faulty installation, lack of reasonable care, or if repaired or serviced by anyone other than a service facility authorized by JVC to render such service, or if affixed to any attachment not provided with the products, or if the model or serial number has been altered, tampered with, defaced or removed;
2. Initial installation and installation and removal for repair;
3. Operational adjustments covered in the Owner's Manual, normal maintenance, video and audio head cleaning;
4. Damage that occurs in shipment, due to act of God, and cosmetic damage;
5. Signal reception problems and failures due to line power surge;
6. Video Pick-up Tubes/CCD Image Sensor, Cartridge, Stylus (Needle) are covered for 90 days from the date of purchase;
7. Accessories;
8. Batteries (except that Rechargeable Batteries are covered for 90 days from the date of purchase)

There are no other express warranties except as listed above.

THE DURATION OF ANY IMPLIED WARRANTIES INCLUDING THE IMPLIED WARRANTY OF MERCHANTABILITY, IS LIMITED TO THE DURATION OF THE EXPRESS WARRANTY HEREIN.

JVC SHALL NOT BE LIABLE FOR THE LOSS OF USE OF THE PRODUCT, INCONVENIENCE, LOSS OR ANY OTHER DAMAGES, WHETHER DIRECT, INCIDENTAL OR CONSEQUENTIAL (INCLUDING, WITHOUT LIMITATION, DAMAGE TO TAPES, RECORDS OR DISCS) RESULTING FROM THE USE OF THIS PRODUCT, OR ARISING OUT OF ANY BREACH OF THIS WARRANTY. ALL EXPRESS AND IMPLIED WARRANTIES, INCLUDING THE WARRANTIES OF MERCHANTABILITY AND FITNESS FOR PARTICULAR PURPOSE, ARE LIMITED TO THE WARRANTY PERIOD SET FORTH ABOVE.

Some states do not allow the exclusion of incidental or consequential damages or limitations on how long an implied warranty lasts, so these limitations or exclusions may not apply to you. This warranty gives you specific legal rights and you may also have other rights which vary from state to state.

JVC COMPANY OF AMERICA
DIVISION OF JVC AMERICAS CORP.
1700 Valley Road
Wayne, New Jersey 07470

REFURBISHED PRODUCTS CARRY A SEPARATE WARRANTY, THIS WARRANTY DOES NOT APPLY. FOR DETAILS OF REFURBISHED PRODUCT WARRANTY, PLEASE REFER TO THE REFURBISHED PRODUCT WARRANTY INFORMATION PACKAGED WITH EACH REFURBISHED PRODUCT.

For customer use:
Enter below the Model No. and Serial No. which is located either on the rear, bottom or side of the cabinet. Retain this information for future reference.

Model No.: _____ Serial No.: _____

Purchase date: _____ Name of dealer: _____

JVC

SERVICE MANUAL

VIDEO CASSETTE RECORDER

HR-S3910U, HR-S5910U

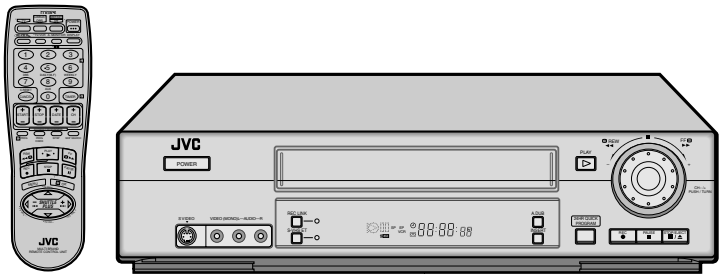

Regarding service information other than these sections, refer to the HR-S3900U service manual (No. 82848). Also, be sure to note important safety precautions provided in the service manual.

SPECIFICATIONS *(The specifications shown pertain specifically to the model HR-S3900U/S3910U/S5900U/S5910U)*

GENERAL

Power requirement	: AC 120 V∿ , 60 Hz
Power consumption	
Power on	: 20 W
Power off	: 2.5 W
Temperature	
Operating	: 5°C to 40°C (41°F to 104°F)
Storage	: –20°C to 60°C (–4°F to140°F)
Operating position	: Horizontal only
Dimensions (W x H x D)	: 400 x 94 x 283 mm
Weight	: 3.3 kg
Format	: S-VHS/VHS NTSC standard
Maximum recording time	
SP	: 210 min. with ST-210 video cassette
EP	: 630 min. with ST-210 video cassette

VIDEO/AUDIO

Signal system	: NTSC-type color signal and EIA monochrome signal, 525 lines/60 fields
Recording/ Playback system	: DA-4 (Double Azimuth) head helical scan system
Signal-to-noise ratio	: 45 dB
Horizontal resolution	
VHS	: 230 lines
S-VHS	: 400 lines
Frequency range	
Normal audio	: 70 Hz to 10,000 Hz
Hi-Fi audio	: 20 Hz to 20,000 Hz
Input/Output	: RCA connectors (IN x 2, OUT x 1) S-video connectors For HR-S5900U/5910U:(IN x 2, OUT x 1) For HR-S3900U/3910U:(IN x 1, OUT x 1)

TUNER

Tuning system	: Frequency-synthesized tuner
Channel coverage	
VHF	: Channels 2–13
UHF	: Channels 14–69
CATV	: 113 Channels
RF output	: Channel 3 or 4 (switchable; preset to Channel 3 when shipped) 75 ohms, unbalanced

TIMER

Clock reference	: Quartz
Program capacity	: 1-year programmable timer/ 8 programs

Memory backup for timer is not supported.

ACCESSORIES

Provided accessories	: Infrared remote control unit, "AA" battery x 2, S-video cable (4-pin), RF cable (F-type)

Specifications shown are for SP mode unless specified otherwise.
E. & O.E. Design and specifications subject to change without notice.

This service manual is printed on 100% recycled paper.

COPYRIGHT © 2001 VICTOR COMPANY OF JAPAN, LTD.

No. 82859
March 2001

[redacted]

[HR-S3910U/U(C)]

The following table indicate main different points between models HR-S3900U,HR-S3910U and HR-S3910U(C).

ITEM \ MODEL	HR-S3900U	HR-S3910U	HR-S3910U(C)
FRONT PANEL color	BLACK	PURE SILVER	←—

[HR-S5910U/U(C)]

The following table indicate main different points between models HR-S5900U,HR-S5910U and HR-S5910U(C).

ITEM \ MODEL	HR-S3900U	HR-S5910U	HR-S5910U(C)
FRONT PANEL color	BLACK	PURE SILVER	←—

[HR-S3910U/U(C)]

The following table indicate different parts number between models HR-S3900U,HR-S3910U and HR-S3910U(C).

PACKING AND ACCESSORY ASSEMBLY <M1>

⚠ REF. NO	ITEM \ MODEL	HR-S3900U	HR-S3910U	HR-S3910U(C)
301	PACKING CASE	LP30899-001B	LP30899-005B	←—
⚠ 310	INST BOOK(FR)	—	—	LPT0503-002A
316	WARRANTY CARD	—	—	BT-52004-1
317	REGIST.CARD	BT-51020-2	←—	—
319	SER.NET CARD	—	—	BT-20071B

FINAL ASSEMBLY <M2>

⚠ REF. NO	ITEM \ MODEL	HR-S3900U	HR-S3910U	HR-S3910U(C)
⚠ 501	FRONT PANEL ASSY	LP10289-063D	LP10289-068B	←—
501A	CASSETTE DOOR	LP20868-035A	LP20868-039A	←—
501C	DISPLAY WINDOE	LP20869-093A	LP20869-0A2A	←—
501D	ORNAMENT	LP21014-001C	LP21014-002A	←—
⚠ 502	TOP COVER	LP10013-021D	LP10013-045A	←—
503	SCREW,X2 TOP COVER(SIDE)	QYTDSF3010M	QYTDSF3010R	←—
529	KNOB ASSY	LP30954-001A	LP30954-002A	←—

[HR-S5910U/U(C)]

The following table indicate different parts number between models HR-S5900U,HR-S5910U and HR-S5910U(C).

PACKING AND ACCESSORY ASSEMBLY <M1>

⚠ REF. NO	ITEM \ MODEL	HR-S5900U	HR-S5910U	HR-S5910U(C)
301	PACKING CASE	LP30899-001B	LP30899-005B	←—
⚠ 310	INST BOOK(FR)	—	—	LPT0503-002A
316	WARRANTY CARD	—	—	BT-52004-1
317	REGIST.CARD	BT-51020-2	←—	—
319	SER.NET CARD	—	—	BT-20071B

FINAL ASSEMBLY <M2>

⚠ REF. NO	ITEM \ MODEL	HR-S5900U	HR-S5910U	HR-S5910U(C)
⚠ 501	FRONT PANEL ASSY	LP10289-062C	LP10289-069B	←—
501A	CASSETTE DOOR	LP20868-005A	LP20868-039A	←—
501C	DISPLAY WINDOE	LP20869-092A	LP20869-0A3A	←—
501D	ORNAMENT	LP21014-001C	LP21014-002A	←—
⚠ 502	TOP COVER	LP10013-021D	LP10013-045A	←—
503	SCREW,X2 TOP COVER(SIDE)	QYTDSF3010M	QYTDSF3010R	←—
529	KNOB ASSY	LP30954-001A	LP30954-002A	←—

Notes : Mark — is not used.
Mark ←— is same as left.

(Sanwa)-V14S1/S15
HR-S3910U/U(C), HR-S5910U/U(C)

JVC SERVICE & ENGINEERING COMPANY OF AMERICA
DIVISION OF JVC AMERICAS CORP.

Head office : 1700 Valley Road Wayne, New Jersey 07470-9976 (973)315-5000
East Coast : 10 New Maple Avenue Pine Brook, New Jersey 07058-9641 (973)396-1000
Midwest : 705 Enterprise Street Aurora, Illinois 60504-8149 (630)851-7855
West Coast : 5665 Corporate Avenue Cypress, California 90630-0024 (714)229-8011
Atlanta : 1500 Lakes Parkway Lawrenceville, Georgia 30043-5857 (770)339-2582
Hawaii : 2969 Mapunapuna Place Honolulu, Hawaii 96819-2040 (808)833-5828

JVC

JVC CANADA INC.

Head office : 21 Finchdene Square Scarborough, Ontario M1X 1A7 (416)293-1311
Montreal : 16800 Rte Trans-Canadienne, Kirkland, Quebec H9H 5G7 (514)871-1311
Vancouver : 13040 Worster Court Richmond, B.C. V6V 2B3 (604)270-1311

Printed in Japan